W. H. GOLDING.

INKING APPARATUS FOR PRINTING PRESSES.

APPLICATION FILED MAY 15, 1913.

1,124,010.

Patented Jan. 5, 1915.

2 SHEETS—SHEET 1.

Fig. 1.

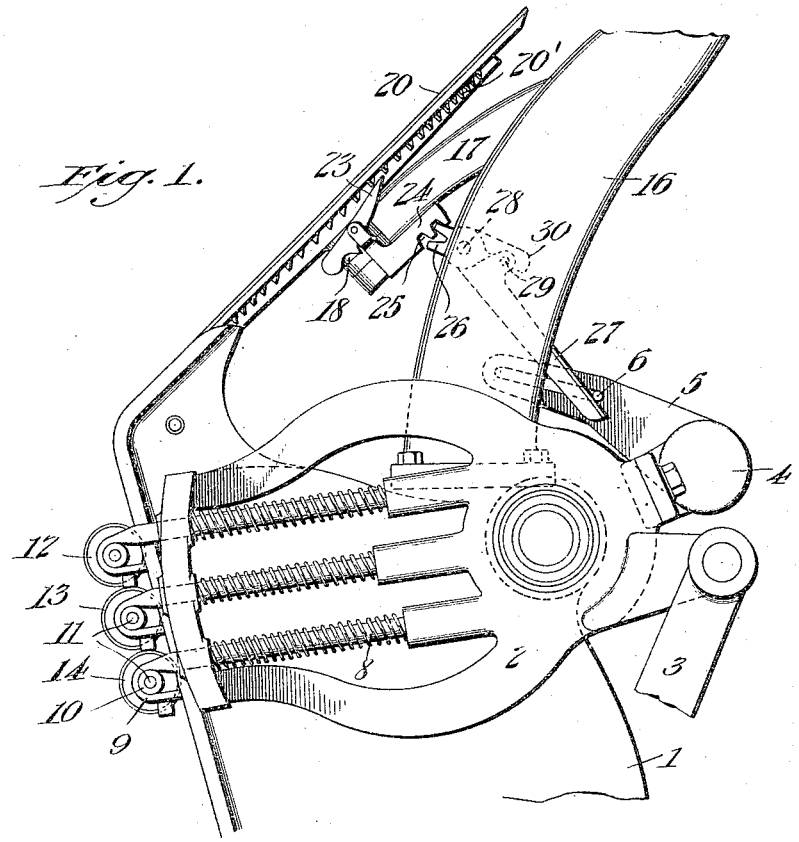

Fig. 5.

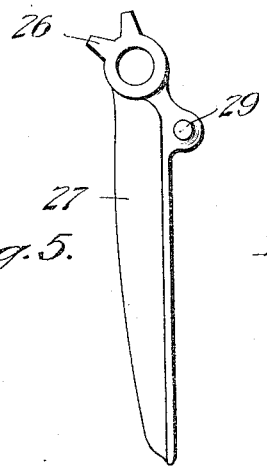

Fig. 6.

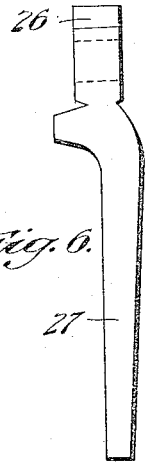

Fig. 7.

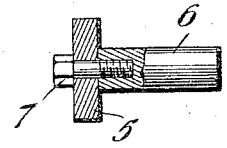

Inventor

W. H. Golding

By E. B. Stocking

Attorney

Witnesses

T. L. Mockrie

Rea Albright

THE NORRIS PETERS CO., PHOTO-LITHO., WASHINGTON, D. C.

W. H. GOLDING.

INKING APPARATUS FOR PRINTING PRESSES.

APPLICATION FILED MAY 15, 1913.

1,124,010. Patented Jan. 5, 1915.

2 SHEETS—SHEET 2.

Fig. 2.

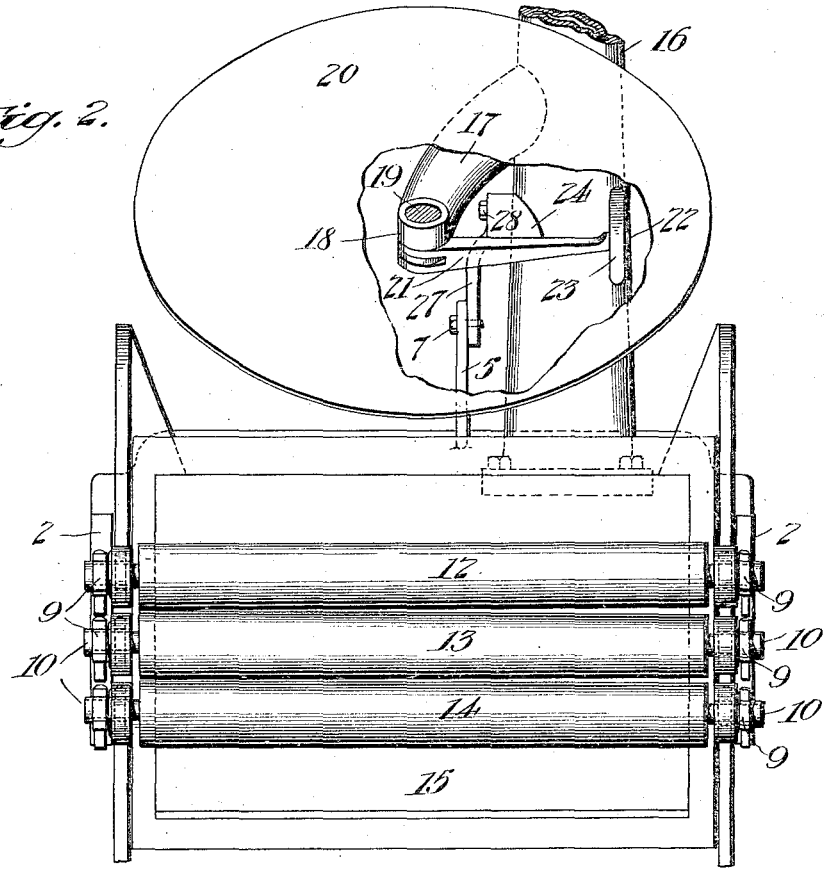

Fig. 3.

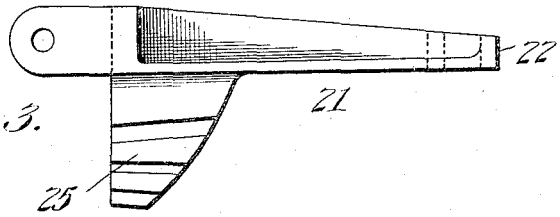

Fig. 4.

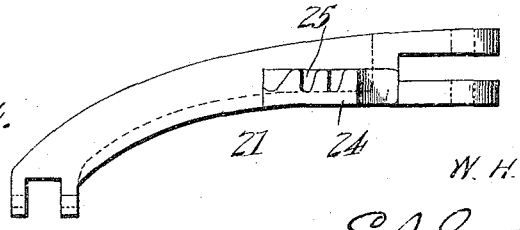

Witnesses

T. L. Mockabee

Ora Albright.

Inventor

W. H. Golding

By E. B. Stocking

Attorney

THE NORRIS PETERS CO., PHOTO-LITHO., WASHINGTON, D. C.

UNITED STATES PATENT OFFICE.

WILLIAM H. GOLDING, OF FRANKLIN, MASSACHUSETTS.

INKING APPARATUS FOR PRINTING-PRESSES.

1,124,010. Specification of Letters Patent. Patented Jan. 5, 1915.

Application filed May 15, 1913. Serial No. 767,836.

To all whom it may concern:

Be it known that I, WILLIAM H. GOLDING, a citizen of the United States, residing at Franklin, in the county of Norfolk and State of Massachusetts, have invented certain new and useful Improvements in Inking Apparatus for Printing-Presses, of which the following is a specification, reference being had therein to the accompanying drawing.

This invention relates to certain new and useful improvements in inking apparatus for printing presses; the object of the invention being to provide novel means for operating the ink disk, whereby the same can be adjusted in accordance with the speed of the press in order to regulate the distribution of the ink.

Another object of the invention is to provide novel means for oscillating the ink disk which is so constructed that the same is oscillated by the roller carrying frame through the medium of a lever having an operable connection with a member mounted upon the bearing spindle of the disk; said member carrying a pawl co-acting with a circular rack formed on the under face of the disk.

A still further object of the invention is to provide a roller frame with vibrating form rollers in which the upper and lower rolls are set at an angle from the center roll, whereby the upper roll will gradually move to the right and the lower to the left and vice versa in the movement of the roller carrying frame, in order to distribute the ink in a uniform thickness over the form of the press.

Other and further objects and advantages of the invention will be hereinafter set forth and the novel features thereof defined by the appended claims.

In the drawings—Figure 1, is a side elevation of a portion of a press showing the application of my improved inking apparatus; Fig. 2, is a front elevation; the inking disk being partly broken away in order to show the operating mechanism for oscillating the disk; Fig. 3, is an inverted plan of the arm for oscillating the disk; Fig. 4, in an elevation of the same; Fig. 5, is a side view of the operating lever; Fig. 6, is an edge view of the same; and Fig. 7, is a detail view of the adjusting pin.

Like numerals of reference refer to like parts in the several figures of the drawings.

In the drawings, 1 indicates a portion of the frame of a printing press, 2 the roller carrying frame pivotally mounted thereon and adapted to be oscillated by a link 3 in the ordinary manner; said frame being composed of side members connected together by a back tie 4 which is provided with a slotted arm 5 in which is adjustably mounted a pin 6 locked in its adjusted postion by a machine bolt 7 working in a threaded bore formed in one end thereof. The purpose of this pin will be hereinafter fully described.

The roller frame 2 is provided with a plurality of spring-actuated rods 8 having hooked outer ends 9 in which are mounted suitable bearing sleeves 10. Mounted in the bearing sleeves 10 are the supporting spindles 11 of form rollers 12, 13 and 14; said spindles being free to rotate and slide within the bearing sleeves for the purpose hereinafter fully described.

The frame 1 of the press is provided with a type bed 15 over which the form rollers 12, 13 and 14 are adapted to travel back and forth in the ordinary manner, and the spring-actuated rods are set within the frame 2 in such a manner that the rollers 12 and 14 are set at an angle in respect to the central roller 13 in order to cause the rollers 12 and 14 to vibrate back and forth in the movement of the rollers over the type bed. When the frame is in the upper position and starts downwardly over the type bed, the upper roller gradually moves to the right and the lower roller to the left, whereby the distribution of ink over the form is greatly improved, it of course being understood that in the reverse movement of the roller frame, the distributing rollers move in opposite directions.

It will be seen from the above construction, that the manner of operating the roller carrying frame has not been changed in any manner from the ordinary form of press now in use, but I have found that by setting the form rollers at an angle, a great advantage is obtained in distributing the ink over the form.

Projecting upwardly from the frame 1 of the press, is a standard 16 having a supporting arm 17 extending therefrom which is provided with a bearing 18 in which a spindle 19 of an ink disk 20 is pivotally mounted; said disk being provided with a

circular rack 20′ upon its under face, as clearly shown in Fig. 1. The lower portion of the bearing 18 of the arm 17 is bifurcated to receive one of the furcations of the bifurcated arm 21 which is pivotally mounted upon the spindle 19 of the disk 20 and held in position thereby in order that the same is free to oscillate upon the spindle under the disk. The other end of the arm 21 is provided with an upwardly projecting bifurcated portion 22 in which is pivotally mounted a gravity pawl 23 co-acting with the rack 21 in such a manner that when the arm is moved in one position, the disk will be oscillated and when moved in a reverse direction, the pawl will ride over the teeth of the rack in order to obtain the intermittent motion which is common in disks now in use on printing presses.

The arm 21 is provided with a lateral projection 24 extending to the rear of the center of the disk and is provided with teeth 25 upon its under face forming a segment which co-acts with teeth 26 formed on the upper end of a pivoted lever 27 mounted upon the standard 16 as shown at 28; the lower end of said lever being engaged by the pin 6 of the arm 5 in such a manner that the same will be oscillated by the movement of the roller carrying frame. The lever 27 is provided with a pin 29 which co-acts with a stop 30 arranged on the standard in order to limit the swinging movement of the lever in one direction. By adjusting the pin 6 within the slotted arm 5, the speed of the oscillation of the ink disk 21 can be regulated according to the speed of the press in order to regulate the distribution of the ink.

From the foregoing description, it will be seen that I have provided a printing press in which the rotary movement of the inking disk can be adjusted according to the speed of the press by shifting the pin in order to adjust the point of contact between the pin and the operating lever, whereby the speed of the inking disk will be increased or decreased.

It will also be seen that I have provided novel means for vibrating the form rollers as they move over the form by arranging the same at an angle to a central roller.

I claim:

1. A printing press, having a swinging roller-carrying frame, said frame being provided with a plurality of spring-actuated rods having hooked outer ends, bearing sleeves arranged in the hooked ends of said rods, rollers having spindles revolubly mounted in said bearing sleeves, said spindles being free to move transversely within their bearings, two of said rollers being arranged at an angle to a medium roller, to cause said rollers to move transversely in the swinging movement of said roller frame.

2. A printing press, having a roller-carrying frame, a rotary inking disk, a rack formed on said disk, an oscillating arm, a pawl carried by said arm co-acting with said rack, a segment carried by said arm, a pivoted lever provided with teeth co-acting with said segment, means for limiting the movement of said lever in one direction, and an adjustable pin carried by the roller frame co-acting with said lever.

3. In a printing press, the combination with a frame having a standard provided with an arm terminating in a vertically disposed bearing, an inking disk provided with a spindle mounted in said bearing, a rack formed on said disk, an oscillating arm mounted upon said spindle, a pawl carried by said arm co-acting with said rack, a segment carried by said arm, a toothed lever co-acting with said segment, and adjustable means carried by an oscillating part of said press co-acting with said lever for rotating said disk.

4. In a printing press, the combination with a frame, of a roller frame having a back tie, a slotted arm projecting from said back tie, a bolt extending through said slotted arm, a pin carried by said bolt and clamped against said arm thereby, an inking disk, mechanism for rotating said disk, said mechanism being operated by said pin.

5. A printing press, having a roller-carrying frame provided with a plurality of spring-actuated rods having hooked ends, bearing sleeves mounted in the hooked ends of said rods in the same plane, rollers provided with spindles slidably and revolubly mounted in said bearing sleeves, the bearing sleeve at one end of said frame being arranged out of transverse alinement with the bearing sleeve of the opposite end of said frame, to cause said roller to reciprocate in the movement of said roller-carrying frame.

6. In a press, the combination with a frame, of a standard extending therefrom, a fixed arm carried by said standard provided with a bifurcated bearing, an inking disk provided with a spindle mounted in said bearing, a rack formed on said disk, a movable bifurcated arm mounted upon said spindle having one of its furcations mounted in the bifurcation of the fixed arm, a pivoted pawl carried by said movable frame co-acting with said rack, and means for oscillating said movable frame.

7. In a press, the combination with a frame, of a standard extending therefrom, a fixed arm carried by said standard provided with a bifurcated bearing, an inking disk provided with a spindle mounted in said bearing, a rack formed on said disk, a movable bifurcated arm mounted upon said spindle having one of its furcations mounted in the bifurcation of the fixed arm, a pivoted pawl carried by said movable frame

co-acting with said rack, means for oscillating said movable frame, and a lever for oscillating said arm.

8. In a press, the combination with a frame, of a standard extending therefrom, a fixed arm carried by said standard provided with a bifurcated bearing, an inking disk provided with a spindle mounted in said bearing, a rack formed on said disk, a movable bifurcated arm mounted upon said spindle having one of its furcations mounted in the bifurcation of the fixed arm, a pivoted pawl carried by said movable frame co-acting with said rack, means for oscillating said movable frame, a lever for oscillating said arm, and means for limiting the movement of said lever.

9. In a press, the combination with a frame, of a standard extending therefrom, a fixed arm carried by said standard provided with a bifurcated bearing, an inking disk provided with a spindle mounted in said bearing, a rack formed on said disk, a movable bifurcated arm mounted upon said spindle having one of its furcations mounted in the bifurcation of the fixed arm, a pivoted pawl carried by said movable frame co-acting with said rack, means for oscillating said movable frame, a lever for oscillating said arm, means for limiting the movement of said lever, and a stop arranged on said standard and coöperating with a pin carried by said lever for limiting the movement thereof.

10. In a press, the combination with a roller carrying frame, of an inking disk, an oscillating arm provided with a segment, a rack carried by said disk, a pawl carried by said arm co-acting with said rack, a pivoted lever provided with teeth co-acting with said segment, a stop for said lever, a slotted arm carried by said roller carrying frame, and a pin adjustably mounted in the slot of said arm co-acting with said lever.

In testimony whereof I affix my signature in presence of two witnesses.

WILLIAM H. GOLDING.

Witnesses:
C. A. Hayward,
W. H. Golding, Jr.

Copies of this patent may be obtained for five cents each, by addressing the "Commissioner of Patents. Washington, D. C."