W. H. GOLDING.
Printing-Presses.

No. 200,827. **Patented March 5, 1878.**

Fig 1.

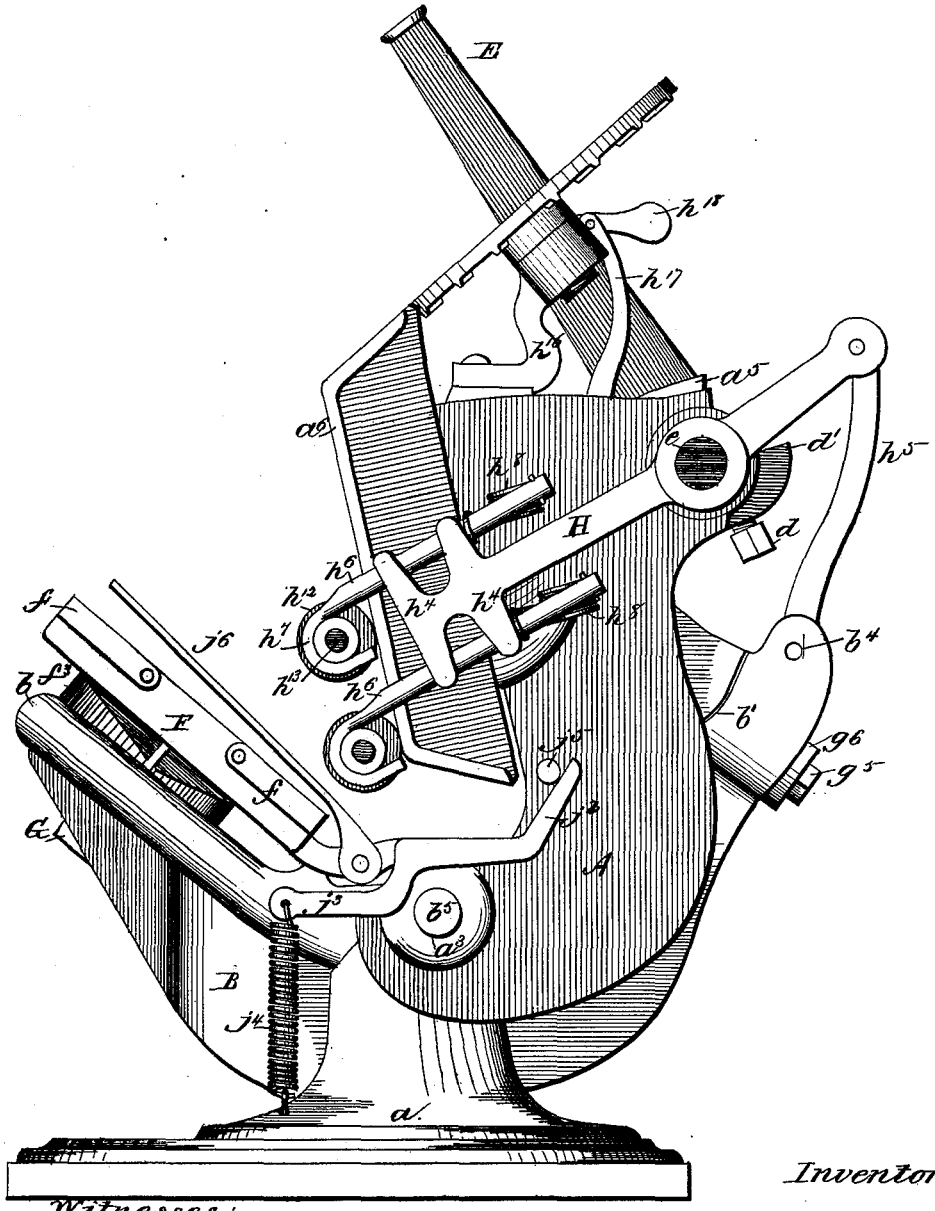

Witnesses;
Harry C. Clark
Mamie Stallings

Inventor.
Wm. H. Golding.
by H. W. Beadle & Co.
Attys.

N. PETERS, PHOTO-LITHOGRAPHER, WASHINGTON, D. C.

W. H. GOLDING.
Printing-Presses.

No. 200,827. **Patented March 5, 1878.**

Fig. 2.

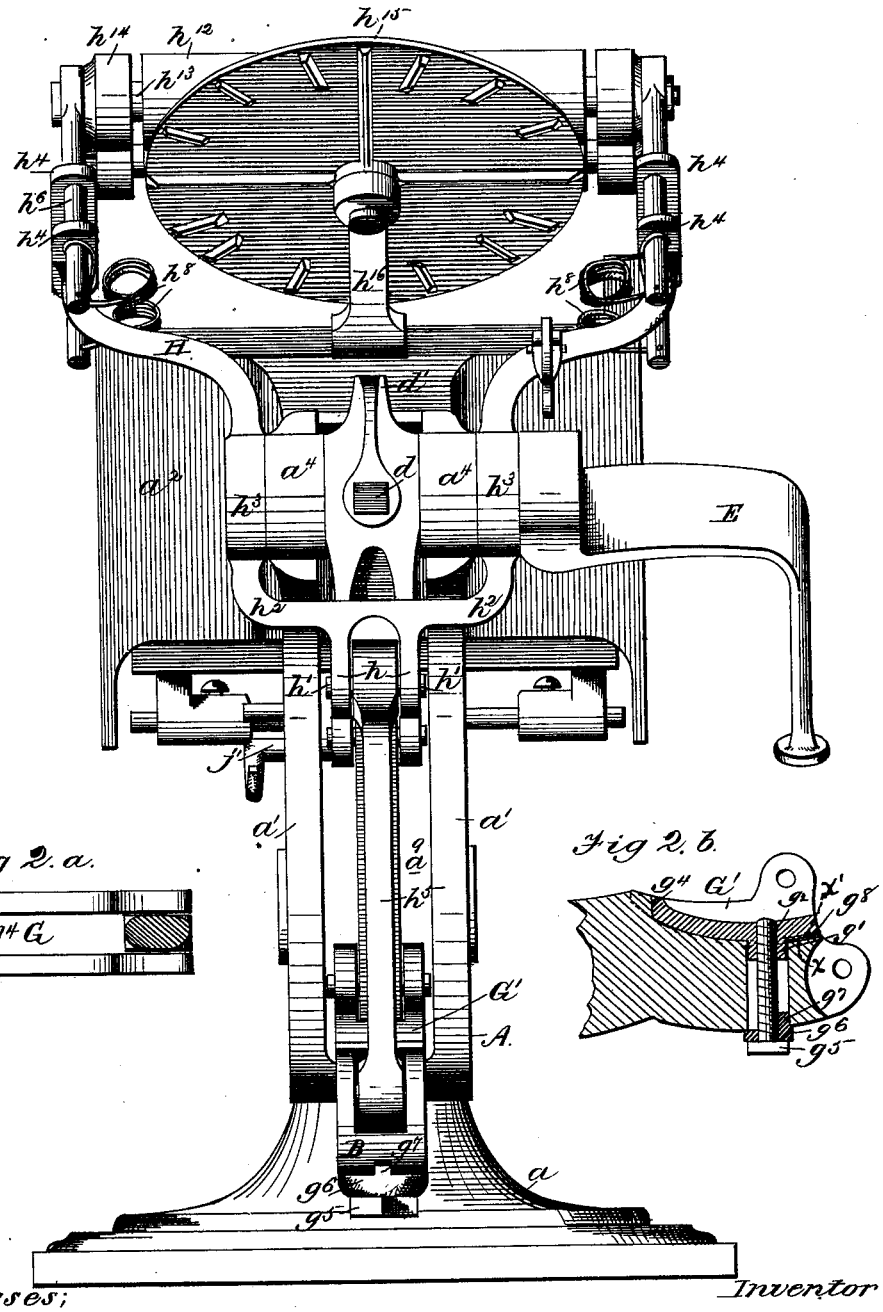

Fig 2. a.

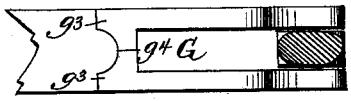

Fig 2. b.

Witnesses;
Harry C. Clark.
Mamie Stallings

Inventor
Wm. H. Golding.
By H. W. Beadle & Co.
Att'ys.

N. PETERS, PHOTO-LITHOGRAPHER, WASHINGTON, D. C.

W. H. GOLDING.
Printing-Presses.

No. 200,827. **Patented March 5, 1878.**

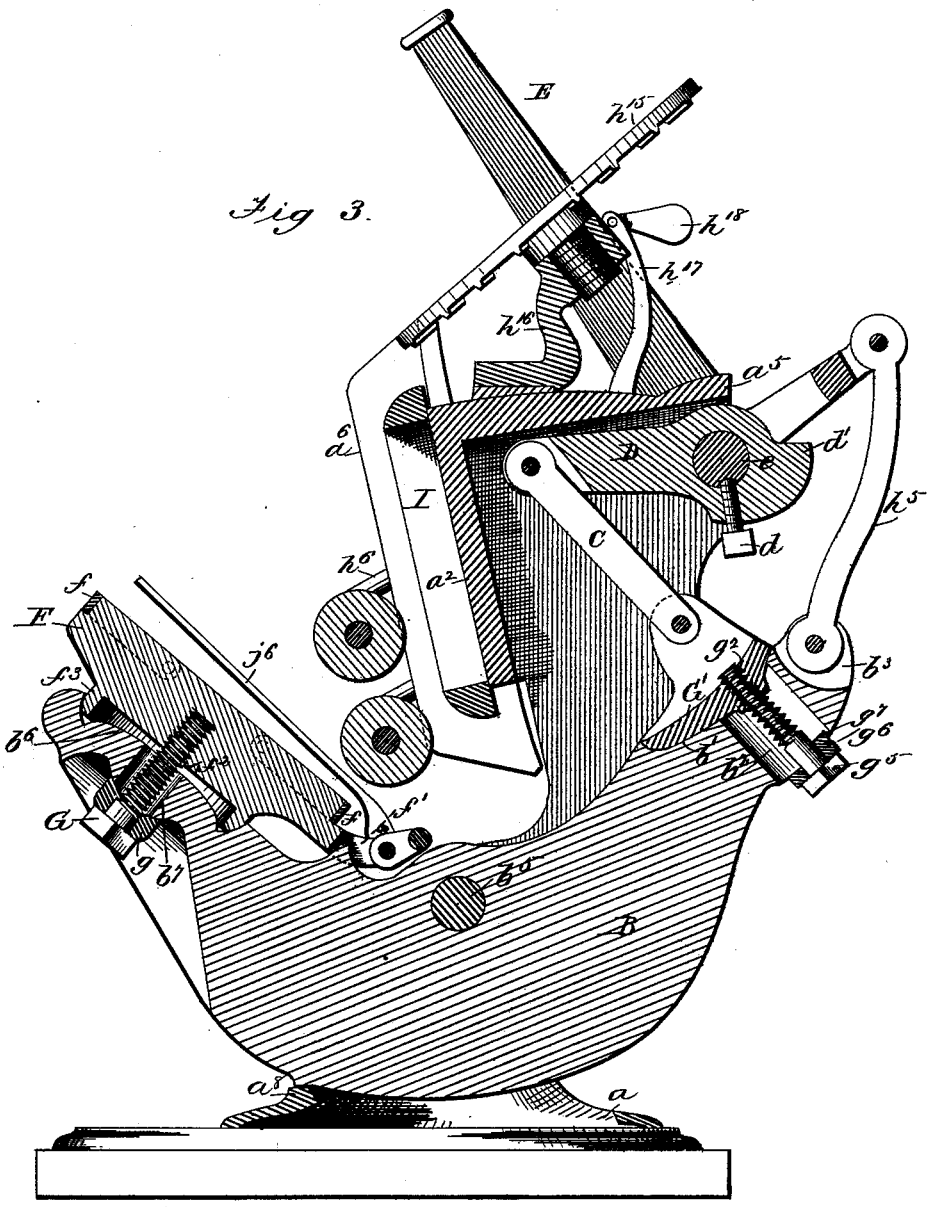

Witnesses;

Harry C Clark.

Hannie Stallings

Inventor.

Wm H. Golding.

by H.W. Beadle & Co

Attys

N. PETERS, PHOTO-LITHOGRAPHER, WASHINGTON, D. C.

W. H. GOLDING.
Printing-Presses.

No. 200,827. **Patented March 5, 1878.**

Fig 4.

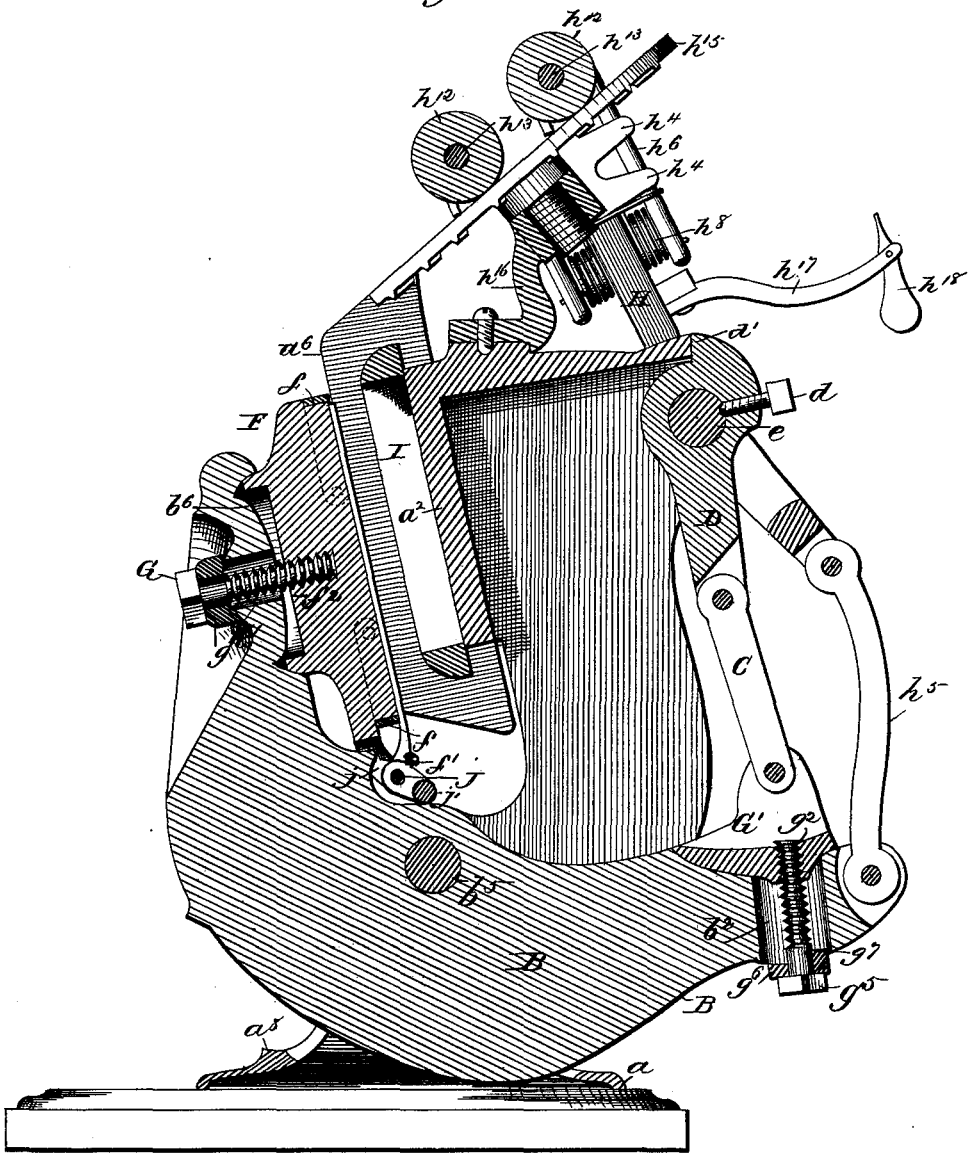

Witnesses;
Harry C. Clark.
Naomi Stallings

Inventors.
Wm. H. Golding
by H. W. Beadle Ac.
Attys

N. PETERS, PHOTO-LITHOGRAPHER, WASHINGTON, D. C.

UNITED STATES PATENT OFFICE.

WILLIAM H. GOLDING, OF CHELSEA, MASSACHUSETTS.

IMPROVEMENT IN PRINTING-PRESSES.

Specification forming part of Letters Patent No. **200,827**, dated March 5, 1878; application filed December 11, 1876.

To all whom it may concern:

Be it known that I, WILLIAM H. GOLDING, of Chelsea, in the county of Suffolk and State of Massachusetts, have invented a new and useful Improvement in Printing-Presses; and I do hereby declare that the following is a full and exact description of the same, reference being had to the accompanying drawings, and to the letters of reference marked thereon.

This invention consists, mainly, in the combination, with a centrally-supported platen and a rocker-beam, of a thrust-lever and adjustable shoe, substantially as described, the construction being such that the strength of the impression is determined by the adjustable shoe and lever, and the squareness of the impression by the platen and the beam.

It consists, further, in certain details of construction, all of which, in connection with the foregoing, will be fully described hereinafter.

In the drawings, Figure 1 represents a side elevation of my improved press; Fig. 2, a rear end elevation; Fig. 3, a central sectional elevation with the platen down, and Fig. 4 a central sectional elevation with the platen up.

To enable others skilled in the art to make and use my invention, I will now proceed to describe fully its construction and manner of operation.

For convenience and clearness of description my invention will be referred to under separate heads, as follows: First, the frame and bed; second, the mechanism for moving the platen; third, the platen and the devices for adjusting it to give a square and even impression; and, fourth, the devices for regulating the strength of the impression.

I. *The frame and bed.*—A, Figs. 1 and 2, represents a casting of proper form and size, which is provided generally with a base, a, preferably of circular form, vertical standards a^1 a^1 rising from the base and the inclined bed a^2, as shown. a^3 a^3 represent bearings in the frame, adapted to support the shaft of the rocker-beam carrying the platen, and a^4 a^4 similar bearings, adapted to support the shaft of the lever which gives movement to the various parts of the machine. a^5, Figs. 1, 3, and 4, represents a stop located upon the top plate, uniting the vertical standards, by means of which the movement of the lever is limited, as will be hereinafter described. a^6 a^6, Figs. 1 and 3, represent side pieces projecting beyond the face of the bed a^2, by means of which the inking-rollers are guided in their movement. a^8, Figs. 3 and 4, represents a stop upon the base a, by means of which the downward movement of the rocker-beam is limited. a^9, Fig. 2, represents a recess formed, it will be observed, between the standards, to afford space for certain moving parts hereinafter referred to.

A frame thus constructed possesses great strength with simplicity of form, and comparatively a small amount of material.

The bed and frame, it will be observed, are cast in a single piece, and the former is centrally supported by the latter.

II. *The mechanism for moving the platen.*—B, Figs. 1, 3, and 4, represents a rocker-beam, consisting of a suitable casting, preferably of semi-oval form, which is provided at one end with the bearing portion b, Fig. 1, adapted to receive the platen, as will be hereinafter described, and at the other with a bearing-face, b^1, Fig. 3, and socket b^2, for holding the connecting parts of the lever devices which actuate it, and also with a recess, b^3, and bearings b^4, Fig. 1, for the shaft of the connecting-rod which unites the rocker-beam to the frame carrying the inking-rollers. b^5, Figs. 1 and 3, represents a shaft resting in the bearings a^3 of the frame, which extends through a proper opening in the beam, for the purpose of centrally pivoting the same to the frame, as shown. c, Figs. 3 and 4, represents a link, which is united below to the rocker-beam, near the rear end of the latter, by intermediate devices hereinafter referred to, and above to the lever D by a transverse pin, by means of which it is pivoted between the arms of the latter, as shown. This lever D is itself held at its upper end by the transverse shaft e of the actuating-lever E, which rests in the bearings a^4 of the frame, and passes through a proper opening in the lever, as shown. d represents a set-screw, held in a proper socket in the lever D, by means of which it is rigidly united to the shaft of the actuating-lever, so that the movements of the latter are positively communicated to it when the two are united. d' represents a stop-projection, which is adapted to

come in contact with the corresponding stop a^5 on the frame, and limit the movement of the lever in one direction.

The operation of this mechanism will be readily understood. By moving the lever E in the proper direction, the levers C and D, forming a toggle-joint, are caused to approach a straight line in the usual well-known manner, and depress with great power the rear end of the rocker-beam. By this means the front end carrying the platen is elevated and the proper impression made. The reverse movement of the lever produces, of course, the opposite effect, and removes the platen from the bed.

III. *The platen and the devices for adjusting it to give a square and even impression.*—F, Figs. 1, 3, and 4, represents the platen, constructed generally in the usual well-known or other proper manner, and provided with the usual clamps *f f* for securing the paper thereto.

f^1, Figs. 3 and 4, represents a socket adapted to receive a proper projection upon the rocker-beam, as shown, by means of which the position of the platen relative to the beam is accurately determined without interfering with its freedom of adjustment. f^2, Figs. 3 and 4, represents a central bearing-face having the threaded opening, as shown, and f^3 an annular flange or rim surrounding the opening, as shown.

b^6 represents a spherical segment, forming the central portion of the face *b* of the rocker-beam, which is provided with a central opening, b^7, as shown.

G represents a bolt, the diameter of the shank of which is less than the diameter of the opening b^7, but which is adapted in size to engage with the socket of the platen for the purpose of securing it in any desired position.

g represents an intermediate washer, having a concave face adapted to bear upon a corresponding convex surface upon the rocker-beam, which is employed for the purpose of furnishing a firm bearing for the head of the bolt in its various positions.

When these parts are together the platen is supported upon the spherical segment of the rocker-beam by means of its central bearing f^2 and the annular flange f^3, as shown. The points of contact between them, it will be observed, coincide with the segment of a sphere, and hence the platen may be moved on its base within certain limits for the purpose of adjustment, without changing in any degree the solidity of its foundation. When adjusted in any desired position it is rigidly fixed by screwing up the bolt, the latter being permitted to adjust itself with the platen by means of the enlarged opening in the bed.

The manner of obtaining a square impression is as follows: The chase containing a form of type having been secured in place, the platen may be properly adjusted by making it loose upon its seat and pressing it firmly against the face of the type. Being free to move upon its base, it follows that it will necessarily adjust itself to the face of the type, so that, when secured by tightening the set-screw, a square impression may be obtained with absolute certainty. This operation, of course, can be quickly and easily performed with a certainty of obtaining a perfect result.

IV. *The devices for regulating the strength of the impression.*—G^1, Figs. 2, 2^b, and 3, represents a foot or shoe, consisting of a proper casting, which is provided below with a bearing-face of such outline as to conform to the upper surface of the rocker-beam on which it rests, and also with a square stud or projection, g^1, Fig. 2^b, adapted to rest in a corresponding socket in the beam, and prevent movement in a lateral direction.

g^2 represents a threaded opening, located near the rear end of the shoe, which is adapted to receive the end of a bolt, and g^3 g^3, Fig. 2^a, rocker-fingers, located at the front end, which are adapted to rest in proper recesses in the rocker-beam.

g^4 represents a recess between the fingers, in which lies a corresponding projection on the beam, as shown, the construction being such that the displacement of the shoe in a forward direction is prevented.

g^5 represents a bolt extending through an enlarged opening in the rocker-beam, by means of which the shoe is properly secured thereto.

g^6 represents a washer interposed between the head of the bolt and the lower face of the beam, which is provided with a stud, g^7, adapted to rest in a slot in the beam, as shown, the construction being such that the bolt, although less in diameter than the opening in which it rests, is held by the washer from displacement in a lateral direction.

g^8 represents a sheet of paper, or other suitable material, which may be interposed, if desired, between the adjacent faces *x x'* of the shoe and beam, for the purpose of increasing the strength of the impression. Instead of these interposed sheets of paper, an eccentric screw or wedge may be employed for the same purpose.

It will be observed that the foot is supported upon the beam in such manner that none of the strain incidental to the operation of the machine is borne by the fastening devices, the thrust of the lever C being communicated to the shoe which lies in the curve of the rocker-beam, without tendency to move in any direction.

The operation of these devices is as follows: When the press is actuated, the thrust of the toggle-joint is communicated through the shoe to the rocker-beam carrying the platen.

If it is desired to increase the strength of the impression, the bolt g^5 is loosened, and one or more sheets of paper, according to the circumstances of the case, are interposed between the shoe and rocker-beam, as shown, the bolt then, of course, being again tightened.

The effect of this operation is to practically increase the length of thrust, so that consequently the platen is moved to a greater distance.

The shoe, it will be observed, readily adjusts itself at its front end, when the position of the rear end is changed, by means of its rocker-fingers, so that it has in all its adjustments a solid bearing on the rocker-beam.

By means of this construction the strength of the impression may be adjusted very quickly and easily, and also with great nicety.

The operation of the various parts having been described in detail, the operation of the press as a whole need not be particularly set forth, it being in general respects similar to others of its class.

Some of the advantages of construction are as follows: The press is simple in construction, compact in form, and possesses great strength, the parts subjected to strain being adapted to receive it in the best manner. The provision for the various essential adjustments is such that they may be quickly, easily, and accurately made.

Having thus fully described my invention, what I claim as new, and desire to secure by Letters Patent, is—

1. In the combination, with a centrally-supported platen and a rocker-beam, a thrust-lever and adjustable shoe, substantially as described, the construction being such that the strength of the impression is determined by the adjustable shoe and lever and the squareness of the impression by the platen and beam.

2. In combination with a toggle-joint and rocker-beam, the removable strip g^8 and an intermediate shoe and set-screw, for determining the length of the thrust, substantially as described.

3. The combination of the following elements: a rocker-beam, a thrust-lever, an intermediate shoe capable of adjustment, and mechanism, substantially as described, for securing the shoe in any position in which it may be adjusted.

This specification signed and witnessed this 4th day of November, 1876.

WM. H. GOLDING.

Witnesses:

EDWARD H. DENNISON,

THOMAS WADE.