(Model.) 5 Sheets—Sheet 1.

W. H. GOLDING.

PRINTING PRESS.

No. 451,681. Patented May 5, 1891.

Fig. 1.

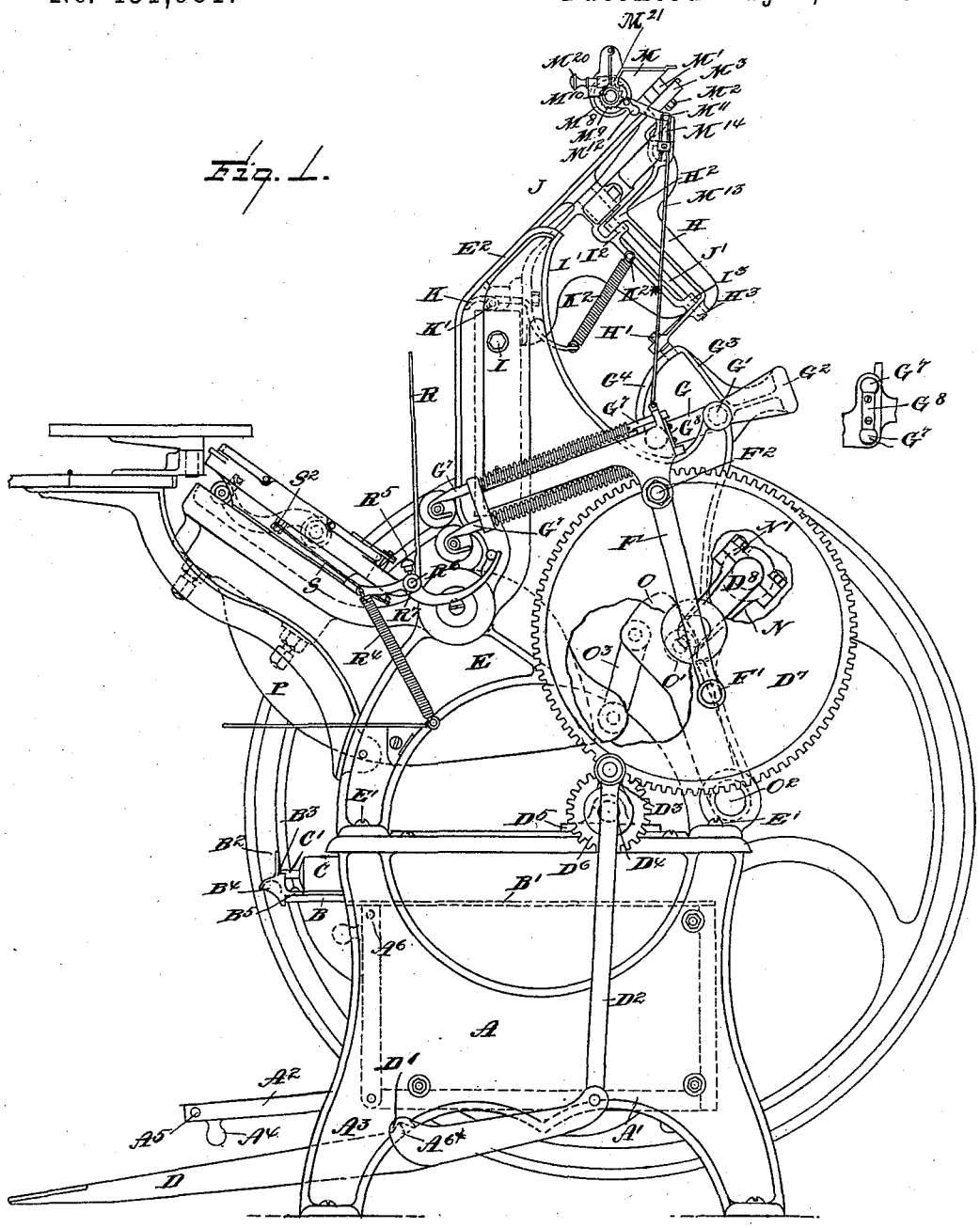

Witnesses:
S. C. Hills,
W. S. Duvall.

Inventor:
William H. Golding.
E. B. Stocking
Attorney

THE NORRIS PETERS CO., PHOTO-LITHO., WASHINGTON, D. C.

(Model.)

5 Sheets—Sheet 2.

W. H. GOLDING.

PRINTING PRESS.

No. 451,681.

Patented May 5, 1891.

Fig. 2.

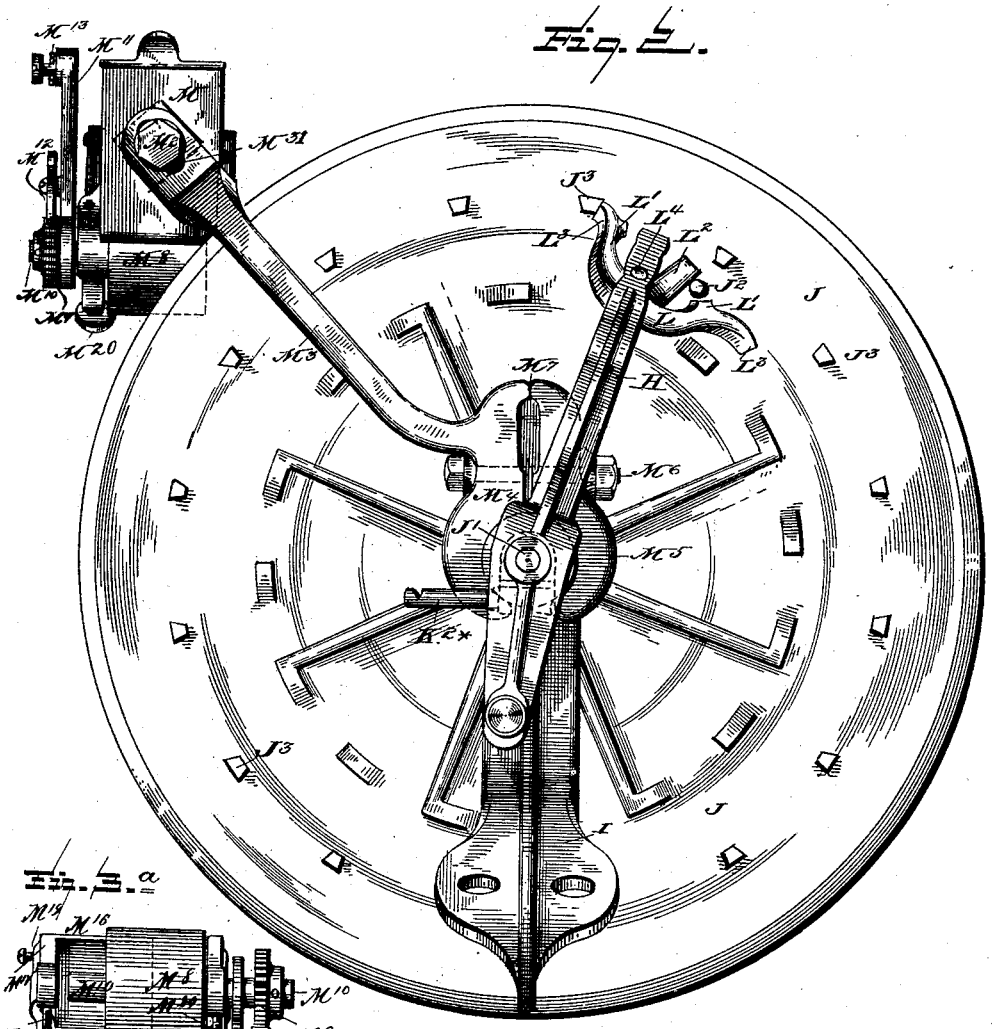

Fig. 3.a

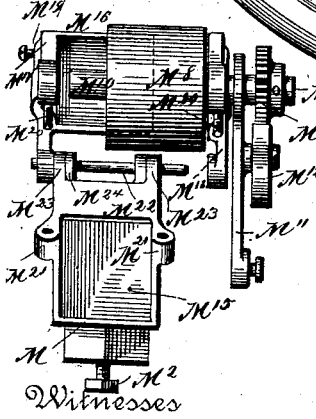

Fig. 3.

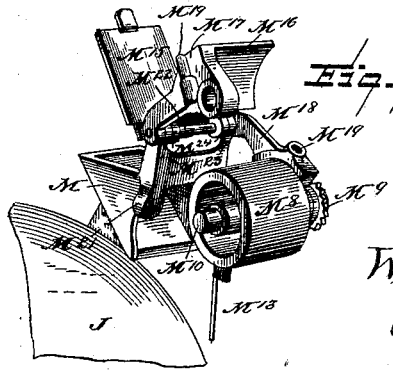

Witnesses

S. C. Mills.

W. S. Turrell.

Inventor

William H. Golding

E. B. Stocking

Attorney

THE NORRIS PETERS CO., PHOTO-LITHO., WASHINGTON, D. C.

(Model.)

5 Sheets—Sheet 3.

W. H. GOLDING.

PRINTING PRESS.

No. 451,681.

Patented May 5, 1891.

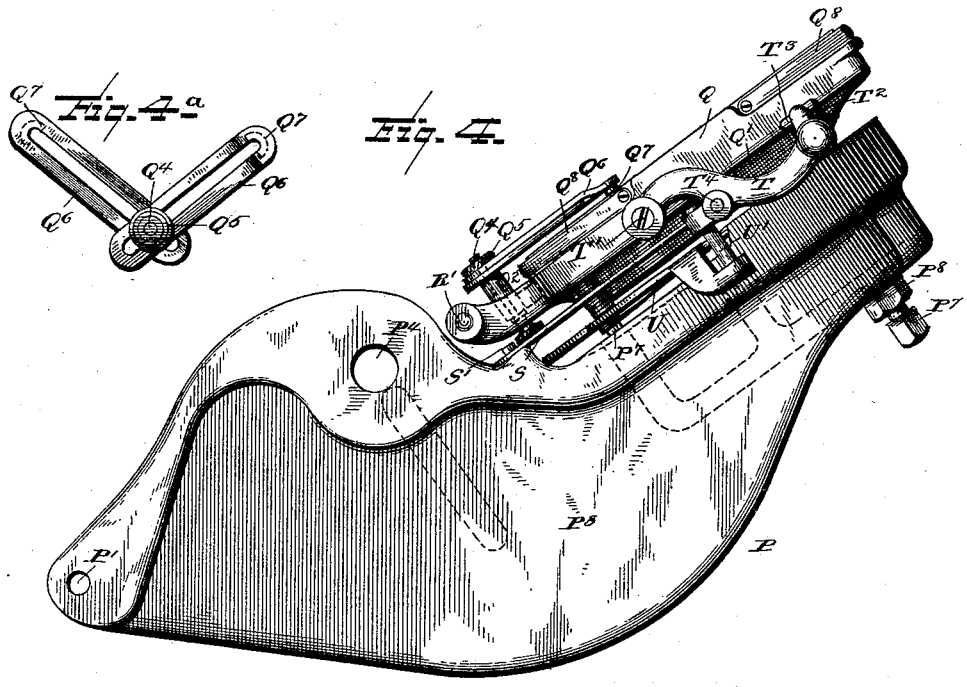

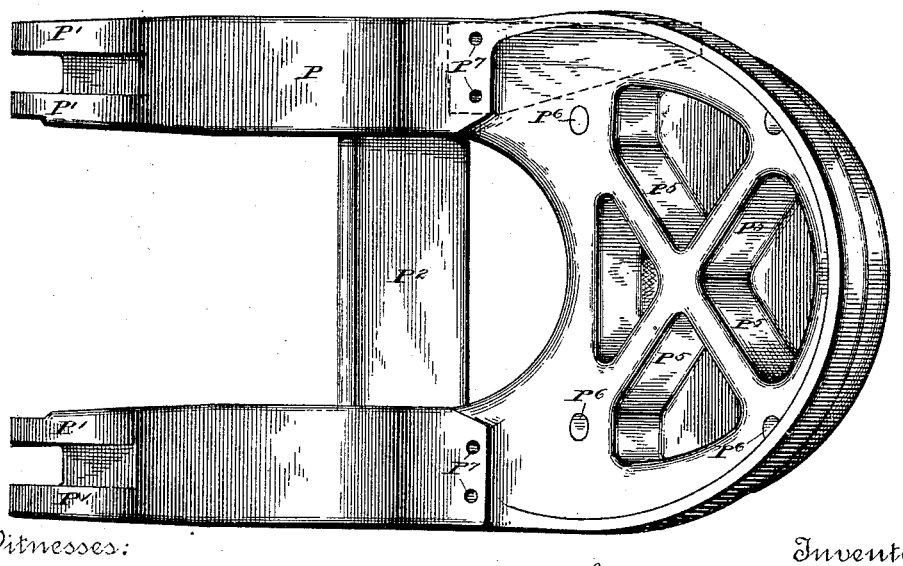

Witnesses:

L. C. Hills.

W. S. Duvall.

Inventor:

William H. Golding.

E. B. Stocking

Attorney

THE NORRIS PETERS CO., PHOTO-LITHO., WASHINGTON, D. C.

(Model.) 5 Sheets—Sheet 4.

W. H. GOLDING.

PRINTING PRESS.

No. 451,681. Patented May 5, 1891.

Fig. 6.

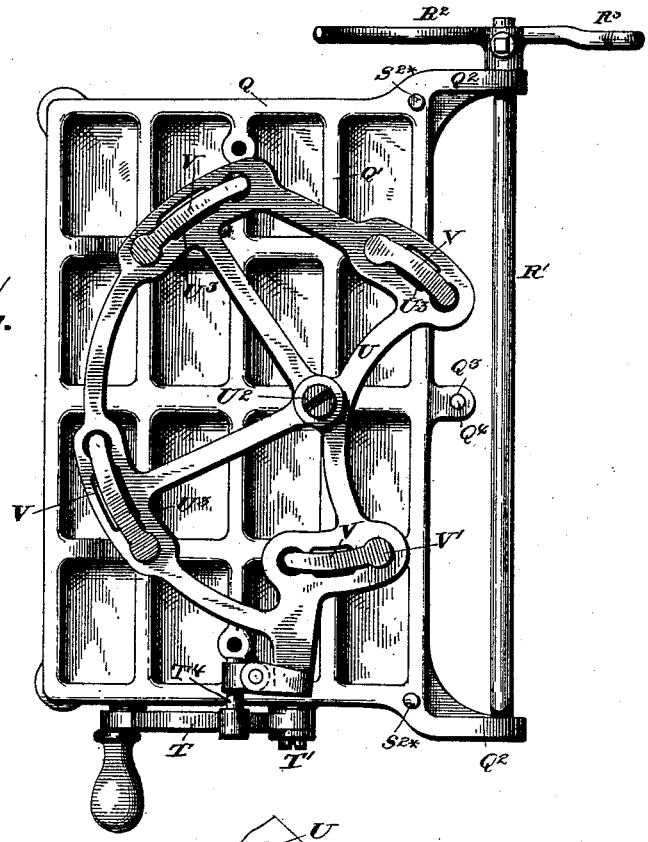

Fig. 7.

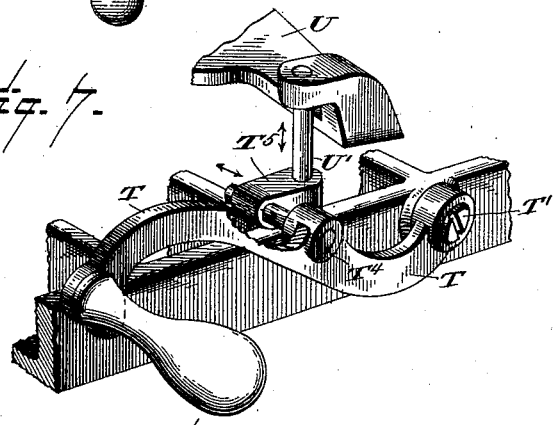

Fig. 8.

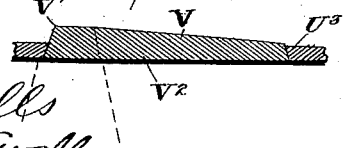

Fig. 9.

Witnesses:
S. C. Hills
W. S. Duvall

Inventor
William H. Golding,
E. B. Stocking
Attorney

THE NORRIS PETERS CO., PHOTO-LITHO., WASHINGTON, D. C.

(Model.) 5 Sheets—Sheet 5.

W. H. GOLDING.

PRINTING PRESS.

No. 451,681. Patented May 5, 1891.

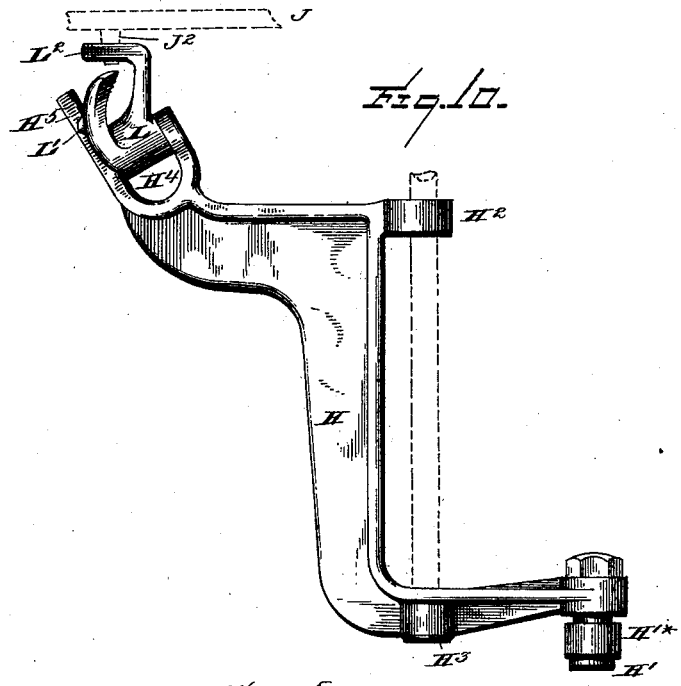

Fig. 10.

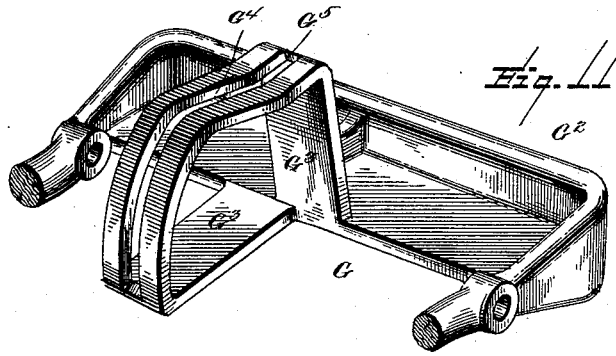

Fig. 11.

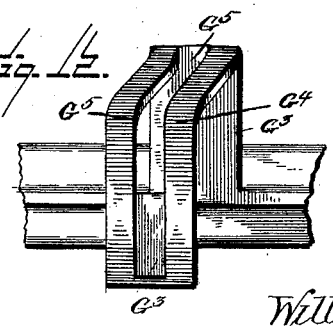

Fig. 12.

Witnesses:

L. C. Hills

W. S. Turrell.

Inventor

William H. Golding.

E. B. Stocking

Attorney

THE NORRIS PETERS CO., PHOTO-LITHO., WASHINGTON, D. C.

UNITED STATES PATENT OFFICE.

WILLIAM H. GOLDING, OF CHELSEA, MASSACHUSETTS.

PRINTING-PRESS.

SPECIFICATION forming part of Letters Patent No. 451,681, dated May 5, 1891.

Application filed September 10, 1888. Serial No. 285,017. (Model.)

To all whom it may concern:

Be it known that I, WILLIAM H. GOLDING, a citizen of the United States, residing at Chelsea, in the county of Suffolk, State of Massachusetts, have invented certain new and useful Improvements in Printing-Presses, of which the following is a specification, reference being had therein to the accompanying drawings.

This invention relates to printing-presses of that class known as "oscillating."

The objects of the invention and the construction, operation, and advantages thereof will appear in the following description, and the novel features will be particularly pointed out in the claims.

Referring to the drawings, Figure 1 is a side elevation of the complete press. Fig. 2 is a rear elevation of the inking mechanism and the bracket for supporting the same on the press. Fig. 3 is a detail in perspective of the ink-well, the parts being shown as opened or partially separated from each other. Fig. 3^a is a front view of the parts of the ink-fountain just after their separation. Fig. 4 is a side elevation of the platen and frame. Fig. 4^a is a plan of the platen-gages. Fig. 5 is a plan of the oscillatory platen-frame. Fig. 6 is a plan of the rear surface of the platen with the throw-off mechanism and with the gripper-shaft and cam arranged therein. Fig. 7 is a detail in perspective, on an enlarged scale, of a portion of the throw-off mechanism. Figs. 8 and 9 are respectively longitudinal and vertical sections of the throw-off wedge. Fig. 10 is a side elevation of the ink-disk pawl-carrying bracket. Fig. 11 is a perspective, and Fig. 12 a front elevation, of that portion of the roller-frame which is provided with a pawl-bracket-operating cam.

Like letters refer to like parts in all the figures.

A represents the base of the machine, and it is provided between its ends with a box A′, the front wall A^2 of which is pivoted, as at A^3, to serve as a door, a knob A^4, and any ordinary spring-bolt or other fastening A^5 is provided, it may be, at one or both of the edges of the door to take into an aperture or apertures A^6 in the side wall of the box, whereby the door can be retained in a closed position.

Within the base and above the box are drawer-cleats B′, on which the bottom board of the drawer B slides. The front wall B^2 of the drawer is provided with a shoulder B^3, having semicircular or other recesses to receive the ends or journals C′ of ink-rollers C. In this instance, also, the front wall B^2 is provided with an integral drawer-pull B^4, the front wall being made of a single casting, which projects to the rear in the form of a bracket, as at B^5, through which screws or bolts are passed into the bottom of the drawer to secure the front wall in position. The rear wall is made like the front wall, with the exception that the drawer-pull B^4 is omitted from the casting.

By the construction thus far described the space between the end walls and the base is utilized not only in the form of a box, but also with a drawer especially adapted for the reception and retention of the ink-rollers by supporting them solely by their journals, so that the body of the roll is not injured and all the rolls within the drawer can be kept free from dust and clean.

Upon the base A and by means of knife-edge projections $A^{6\times}$ is mounted a treadle D, it being provided with a laterally-projecting lug-embracing pocket D′ on each side, so that by means of a connecting-rod D^2 and crank-arm D^3 the main shaft D^4 of the press may be rotated. This shaft is mounted in bearings D^5 arranged on the top of the base and at each side thereof, and carries a pinion D^6, which meshes with the master-gear D^7 of the press. A crank-shaft D^8 is mounted in the frame E, which is connected to the base by bolts E′. The gear D^7 is keyed to the crank-shaft. A crank-rod F is mounted on a pin F′, projecting from the outer surface of the gear D^7, and serves by the pivotal connection at F^2 with the roller-frame G to oscillate said frame on its pivotal bearing G′ in the frame E. The rear cross-bars G^2 of the roller-frame G have formed thereon, or it may be attached thereto, branches G^3, arranged substantially at a right angle to each other and connected by a vertically and laterally curved slotted bridge G^4, the slot G^5 of which is designed to operate the pawl-carrying bracket H by means of a pin H′ thereon, which projects into said slot.

I′ represents the ink-disk-supporting bracket, which is bolted at I to the top of the bed of the press and substantially at the center transversely of the platen. The bracket I′ is of such a shape as to bring the surface of the disk J in line with the roll-track E^2 of the frame E. The spindle J′ of the disk passes through bearings H^2 H^3, formed in the pawl-bracket, and in bearings I^2 I^3 of the disk-supporting bracket I.

K represents a chase-latch, which is pivoted at K′ at the top of the bed, and is projected beyond its pivot and connected with a coil-spring K^2, which is attached to the lug $K^{2\times}$, extending from the ink-disk bracket, so that by said spring the latch is held in a position to retain the chase against the bed and under, so as to permit of raising the latch for the removal of the chase. The upper end of the pawl-bracket is bifurcated to form two arms H^4 and H^5, the latter extending beyond the former so as to form an obstruction against which a stop L′ on the double pawl L may abut. These projections L′ are on the tooth portion of the pawl, of which there are two, and between the two there projects a reversing-arm L^2, which is whenever during a movement of the ink-disk J operated by the lug J^2, projecting from the lower surface of the disk J, (see Fig. 10,) so as to throw one of the teeth L^3 of the pawl out of operation and to bring the opposite tooth L^3 into operation with a series of lugs J^3, (see Fig. 2,) formed on the under surface of the disk, and constituting what may be termed the "rack-teeth" of the disk, as they alone operate in connection with the pawl proper.

The bridge G^4 on the roller-frame is curved vertically for the purpose of maintaining the pin H′ and its anti-friction roller $H'^{\times}$ when employed constantly within the slot G^5, and the lateral curvature of the bridge and of the slot is for the purpose of oscillating the pawl-bracket H, in order that the pawl may travel over the rack-lugs J^3 in one direction and be brought against one of said lugs when traveling in the opposite direction, so as to give motion to the ink-disk to secure a proper distribution of the ink upon the ink-rollers as they travel over the same. (See Figs. 10 to 12.) When during the return-stroke of the bracket H, in which it is carried over one or more of the rack-lugs J^3, the arm L^2 reaches the lug J^2, then said arm serves to swing the pawl L on its pivot L^4 so as to turn the tooth, which, during the preceding platen-stroke, moves the disk away from, so as to pass over the adjacent rack-lug J^3 and to bring the opposite tooth L^3 toward the disk and in line with its adjacent rack-lug J^3, so that said opposite tooth becomes for a time the operating tooth of the pawl, whereby the disk is rotated in the opposite direction. There being but one reversing-lug J^2, it is apparent that the disk will be reversed at the end of each substantially complete rotation.

M represents the ink-fountain, which is mounted on the riser M′ and secured by the bolt M^2 to an arm M^3, which terminates in clamps M^4 M^5, adapted to embrace the bracket I′ above its bearing I^2, and to be removably secured to said bracket by means of a bolt M^6, passing through both of the clamps, which are extended beyond the bolt and adapted to abut against each other, as at M^7. The object of the riser M′ is to elevate the ink-fountain and its delivery-roll above and out of contact with the base of the ink-disk, in order that the ink shall be conveyed directly from the fountain to the ink-roll of the press instead of to the ink-disk.

The fountain-roll M^8 is provided with a rigidly-mounted ratchet-wheel M^9, and on the shaft M^{10} of the roll there is loosely mounted a pawl-lever M^{11}, carrying a pawl M^{12}. A connecting-rod M^{13} extends from the free end of the pawl-lever M^{11} to a lug extending from the roll-frame G at such a distance from its pivot as to give the desired throw of the connecting-rod and to the bolt-lever. The connecting-rod is slotted, as at M^{14}, to give a period of rest between the movements of the pawl-lever.

The ink-fountain M embodies novel features of construction. It has a cover M^{15}, a roll-cover M^{16}, made as a part of and projecting from one of the roll-bearing brackets M^{17}. It has also an opposite roll-bearing bracket M^{18}. These brackets are perforated, as at M^{19}, for the reception of thumb-screws M^{20}, which are seated in lugs M^{21}, formed at opposite sides of the fountain, as seen best in Fig. 1, so that two of said thumb-screws serve to bind the parts together to permit of their separation for cleaning and to regulate the quantity of ink delivered by the roll M^8. The bracket M^{18} has projecting therefrom and seated therein rigidly a pivotal rod M^{22}, which passes through the upper ends of standards M^{23}, projecting upwardly from the fountain-bed. Now it will be seen that the single pivot-rod M^{22} serves to connect the cover M^{15}, the roll-cover M^{16}, and the two roll-supporting brackets M^{18} pivotally with the fountain-body as said rod passes through lugs M^{24}, formed on the cover M^{15}, which lugs are arranged inside of the standards M^{23}, while the brackets M^{17} and M^{18} are arranged outside of said standards.

In Figs. 3 and 3^a the parts are shown as opened away from each other. Now by drawing the bracket M^{18} away from the standards M^{23} the said parts may be entirely separated from each other for cleaning purposes. The roll M^8 fits ink-tight within the brackets and beneath its cover M^{15} and against the outlet of the fountain-body, so that when the parts are closed the quantity of ink delivered by the roll may be regulated by means of the screws M^{20}.

Referring now to Fig. 1, N represents a connecting-rod connected operatively with the connecting-shaft D^8 by the divided box N′, and extends and is pivotally connected at O′ to the rock-arms O, (shown in dotted lines,) which are pivoted in the frame at O^2. The

means for pivotally connecting the rod N to the rock-arms O may be readily extended from one to the other of the rock-arms O; or said arms may be constructed with an integral cross-bar similar to the cross-bar G^2 of the roll-frame. Links O^3 serve to connect the rock-arms with the oscillatory platen-support P by being pivoted in ears P′, cast or otherwise formed at its lower extremity. The platen-support is a strong, heavy, substantially **U**-shaped casting having a strenghening cross-bar P^2, extending from one arm of the **U** to the other, and having strengthening-flanges P^3 under each arm around the curves of the **U**, as clearly shown in Fig. 4.

P^4 represents the pivot-bearing of the support. The head of the support is provided with strengthening-ribs P^5 and with perforations P^6, in which are seated the platen-adjusting bolts P^7, which have a set-nut P^8.

Q represents the platen proper, which is cast with the usual strengthening-ribs Q′ and with pivot-lugs Q^2 for the support and operation of the gripper-shaft R′, to which is secured the grippers R and the gripper-cam R^2, extended beyond its pivot, as at R^3, for the connection of the gripper-spring R^4, the other end of which is secured to any suitable fixed part. Thumb-screws R^5, Fig. 1, project through collars R^6 of the gripper-fingers and into a slot R^7 in the gripper-shaft formed for longitudinal adjustment of the grippers upon the shaft. The platen is also provided with an apertured lug Q^3, through which a thumb-screw Q^4 passes, and is threaded in a nut Q^5, arranged above two longitudinal slotted platen-gages Q^6, each of which is provided at its upper end and on its lower surface and within its extreme edge with a curved depending lug Q^7, against which the lower edge of the paper rests when arranged on the gage. (See Figs. 4 and 4^a.) The gages may be adjusted by turning either the head of the thumb-screw or the nut Q^5 and by sliding the gages along on the bolts to determine the distance of their projection upwardly on the platen, and also by swinging the gages on the bolt to determine the distance which they shall be from each other. In this adjustment the curvature of the lug Q^7 is advantageous in giving a uniformly smooth surface for supporting the sheet in all positions of adjustment of the gages.

The throw-off mechanism involves the following construction: The platen proper is connected with the platen-support solely by springs S, which are at one end secured to the support by bolts S′ entering apertures P^7 in the support. The opposite end of each spring is secured to the platen by bolts S^2, entering apertures $S^{2\times}$ formed in the platen. Q^8 represents ordinary platen-clamps. At one end of the platen and entering its edge there is seated a pivot T′ for throw-off lever T. At its free end this lever is provided with a lug T^2, adapted to take upon a slight projection T^3 formed on the edge of the platen, and serving to removably connect the free end of the lever against accidental displacement, and yet permit of its quick and ready detachment. Between the free end and the pivot of the lever T there projects inwardly between the platen and platen-support a rod T^4. A link T^5 is mounted for reciprocation on the rod T^4. At its opposite end it is perforated at a right angle to the bearing for the rod T^4, for the reception of a rod U′, projecting from the cam-frame U of the throw-off mechanism. This cam-frame is pivoted to the under surface of the platen, as at U^2, and is provided with recesses U^3, having its walls beveled inwardly from the lower to the upper surface of the frame for the reception of similar beveled wedges V. These wedges are beveled lengthwise and have enlarged heads V′, which, when the platen is in position to take an impression from type on the bed, rest upon the bolts P^7 of the platen-support. The inner surface V^2 of each wedge is plain and takes bearing on the trued faces of lugs Q^9, (see Fig. 4,) formed at the intersection of two of the strengthening-ribs Q′ of the platen. Now it will be observed, as thus far described, that as the platen is in position to take an impression when the free end of the lever T is connected therewith it can be quickly thrown off as it is approaching the bed by simply grasping the handle of the free end of the lever and quickly drawing it toward the operator, the direction of the movement of the platen assisting the operation. As the lever is drawn toward the operator, the cam-frame is rotated on its pivot, thereby withdrawing the thicker ends of the wedges from between the platen and the bolts in its support. The platen is thrown away by means of the springs above described. During this movement of the cam-frame the link T^5 travels toward the lever on the pin T^4 by reason of the curved path of the pin U′ about the pivot U^2 from its end toward the frame U until it reaches a point opposite the pivot of the frame, when it travels away from said frame on the pin U.

In Fig. 7 a portion of the frame U and its pin U′, the lever, and a portion of the platen are shown in the relative positions which they occupy when the platen is "on." By this construction of throw-off mechanism there is but one part to be seized by the operator, and the platen is practically locked beneath when "on" or "off." Of course it is understood that the springs S permit of the change of the relative positions, its relative support, and at the same time maintain a parallelism which would not be secured by the mere pivotal connection, and yet have such a connection constructed to maintain parallelism between the platen and bed when the platen is on. Such parallelism will be immaterial when the platen is off. Any ordinary pivotal connection of the platen and support can, if desired, be substituted for the spring-connection herein disclosed, so that the novel features of my

throw-off mechanism are not limited in this particular.

It now only remains to follow the operation of the parts which given motion to the platen and its support. The crank-shaft D^8 is rotated by the gear D^7, which is keyed thereto, and said shaft gives oscillation to the rock-arms O, thus giving oscillation to the platen-support by means of the intermediate links O^3. When the platen is parallel with the bed, the parts approach a straight line, extending from the center of the pivot O^2 to about the point, Fig. 1, whereby rebounding of the platen is prevented and a smooth reversal of the direction in its travel—that is, away from the bed—is secured. The casting (the lugs L′ on the teeth L^3 of the double pawl L) renders the adjustment of the pawl to co-operate with the frame H^4 and the rack-lugs a simple matter, in that after being cast and while assembling the parts the lugs L′ simply require, by grinding, a reduction to such a length as to permit of a swinging movement of the bolt on its pivot sufficient only to allow the tooth of the pawl to drop behind the rack-lug, and at the same time to limit said movement so that the extreme end of said tooth shall not come into contact with the disk between the lugs. The arm L^2 also serves as a weight or a counter-balance to maintain the idle-tooth of the double pawl away from the disk until said arm reaches the reverse-lug J^2. The ink-fountain supporting-arm is slotted, as at M^{31}, to permit of such an adjustment as will cause the inking-roll M^8 of the fountain to project more or less over the ink-disk. Each ink-roller rod G^7 is bent to embrace the roller-journal and at its opposite end is flattened to fit the end of a guide-bar G^8, secured at a side of the rod upon the ink-roller frame. This construction prevents the rod G from turning in its bearings.

What I claim is—

1. A drawer for ink-rollers, having opposite walls thereof provided with ink-roller-journal-receiving depressions and with lugs for the connection of the wall of the drawer with its bottom, substantially as specified.

2. A wall for an ink-roller drawer, having ink-roller-journal receptacles and having integral lugs for connecting the wall to the adjacent part of the drawer, the whole formed as a single casting, substantially as specified.

3. In a press of the class described, an oscillating platen-support, a rock-arm connected by a link to the same, a crank-shaft connected to the rock-arm, and gearing connecting the treadle with the crank-shaft, substantially as specified.

4. In a press of the class described, a substantially U-shaped platen-support adapted to be extended beyond its point of suspension and connected by links pivoted to the arms of the support, and two rock-arms, in combination with a crank-shaft pivotally connected with the rock-arms, the latter being pivoted at a point below the point of suspension of the platen-support, whereby the operative parts approach a straight line when the platen is in a vertical position, substantially as specified.

5. In a press of the class described, a pivoted support extended beyond its pivot, rock-arms pivoted at a point below the pivot of the support, links connecting the free end of the rock-arms with the support, a crank-shaft and a connecting-rod extending from the same to the rock-arms and connected therewith at a point between their free ends and their pivots, substantially as specified.

6. The combination, with an ink-disk and ink-disk-supporting bracket of a printing-press, of a pawl-carrying bracket mounted for pivotal movement and provided with an arm extending beyond its pivot, and a slotted cam arranged upon the ink-roller frame to engage a pin on the pawl-carrying bracket, and means for oscillating said frame, substantially as specified.

7. The combination, with an ink-disk having a series of rack-lugs and a pawl-reversing lug, of a double-toothed pawl having an arm arranged in the path of the reversing-lug of the disk, substantially as specified.

8. An ink-disk provided with a pawl-reversing lug, substantially as specified.

9. A double-toothed ink-disk-operating pawl having an arm projecting midway between the teeth of said pawl and having its outer end at substantially right angles to its body portion, substantially as specified.

10. The combination, with the roller-frame of a printing-press and with a cam thereof, of an oscillating pawl-carrying bracket, a double pawl arranged therein and provided with a reversing-arm, and an ink-disk provided with rack-lugs and a reversing-lug, substantially as specified.

11. In a printing-press, an ink-fountain the cover, roller-support, and roller-cover of which are removably connected by a single pivotal rod, substantially as specified.

12. In a printing-press, an ink-fountain having its cover, the cover for its roller, and the brackets for supporting said roller and the body of the fountain connected by a single rod, substantially as specified.

13. In a printing-press, an ink-fountain having one of the journals of its roller removably mounted in a roll-supporting bracket, the latter being retained in operative position by the ink-supply-adjusting screw, substantially as specified.

14. In a printing-press, an ink-fountain having the roller-supports and roller-cover thereof secured in operative position by the ink-supplying adjusting-screw thereof, substantially as specified.

15. In a printing-press, an ink-fountain having a roll-cover and roll-supporting bracket formed in a single casting, substantially as specified.

16. In a printing-press, an ink-fountain having roll-supporting brackets pivotally con-

nected to the fountain and one longitudinally adjustable and secured in operative position by the ink-supply-adjusting screw, substantially as specified.

17. In a printing-press, an ink-fountain body provided with standards apertured for the reception of a rod and having its cover pivoted to said rod, substantially as specified.

18. In a printing-press, an ink-fountain body having standards apertured for the reception of a rod and roller-supporting brackets mounted on said rod, one rigidly and the other removably, substantially as specified.

19. In a printing-press, a roll-cover adapted on its under surface to fit the periphery of the roll and terminating at one side in a bracket provided with a roll-bearing, which bracket is fitted to the end of the roller, provided with an aperture for an adjusting-screw and with a bearing for its pivotal connection with a fountain-body, substantially as specified.

20. The combination, with an ink-disk-supporting bracket, of an ink-fountain-supporting arm terminating in clamps which are adapted to embrace said bracket, substantially as specified.

21. The combination of a pawl-carrying bracket having a projecting arm, as at H^5, and a double-toothed pawl the teeth of which swing in a common plane with said arm, substantially as specified.

22. The combination, with the platen and its support, of yielding means arranged between and substantially parallel with the platen and support and connected at its ends thereto, substantially as described.

23. The combination, with a platen and its support, of a movable series of wedges interposed upon curved lines between the platen and support, and means for changing the position of the wedges, substantially as specified.

24. The combination, with a platen and its support, of an interposed pivot-frame carrying wedges having enlarged heads, substantially as specified.

25. The combination, with a platen and its support, of springs connecting the one with the other and of an interposed series of wedges beveled lengthwise and having enlarged heads designed to rest upon the bolts of the platen-supports, and means for operating the same, substantially as specified.

26. The combination, with a platen and its support, of an interposed frame carrying wedges and connections for the frame and lever pivoted to the under surface of the platen, substantially as specified.

27. The combination, with a platen and its support, the latter provided with adjusting-bolts and the former with bearing-surfaces substantially opposite said bolts, of a frame carrying wedges and adapted to move the same between said bolts and surfaces, substantially as specified.

28. The combination, with a platen and its support, the latter having adjusting-bolts and the former having bearing-surfaces, of a pivoted frame carrying curved wedges, substantially as specified.

29. The combination, with a platen and its support, of an interposed wedge-carrying frame, a rod projecting over said frame, a lever having a rod projecting at a right angle from the first-mentioned rod, and a link connecting and adapted to slide on the rods, substantially as specified.

30. As a means for operating a throw-off mechanism of a press, a lever having a rod, a partially-rotating device for moving the platen to and fro, a rod extending from said device, and a link connecting the same with the rod of the lever, substantially as specified.

31. The combination, with a platen and its support, of a frame having recesses with inclined walls and with beveled wedges adapted to fit said recesses, substantially as specified.

32. In combination with the platen of a press, a lever pivoted to the platen, throw-off mechanism, the parts thereof with the exception of said lever being arranged in rear of the pivot of the lever with relation to the direction of the movement of the platen toward the bed, and connecting devices arranged between the throw-off mechanism and the lever, whereby a simple movement of the free end of the lever in a direction opposite to the movement of the platen serves to throw the same off, substantially as specified.

33. The combination, with the platen of the printing-press, of a bearing, as V, for the platen, having a flat surface for holding the strain of the impression and an inclined portion for throwing off the impression, substantially as specified.

In testimony whereof I affix my signature in presence of two witnesses.

WILLIAM H. GOLDING.

Witnesses:

STEPHEN A. SMITH,

JAS. P. GORDON.