(No Model.) 5 Sheets—Sheet 1.

W. H. GOLDING.

CHROMATIC ATTACHMENT FOR PRINTING MACHINES.

No. 322,441. Patented July 21, 1885.

Fig. 1.

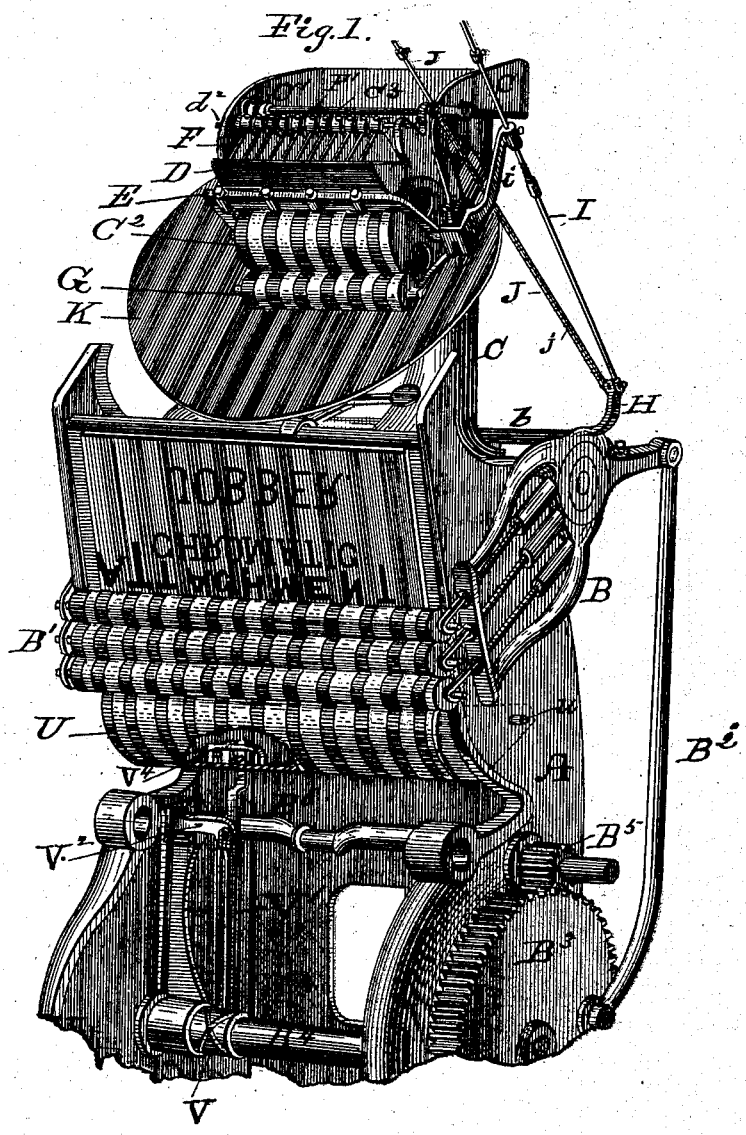

Witnesses:
S. L. Hills,
Wm. J. Durall

Inventor:
Wm. H. Golding
By E. B. Stocking
Atty.

N. PETERS, Photo-Lithographer, Washington, D. C.

(No Model.) 5 Sheets—Sheet 2.

W. H. GOLDING.

CHROMATIC ATTACHMENT FOR PRINTING MACHINES.

No. 322,441. Patented July 21, 1885.

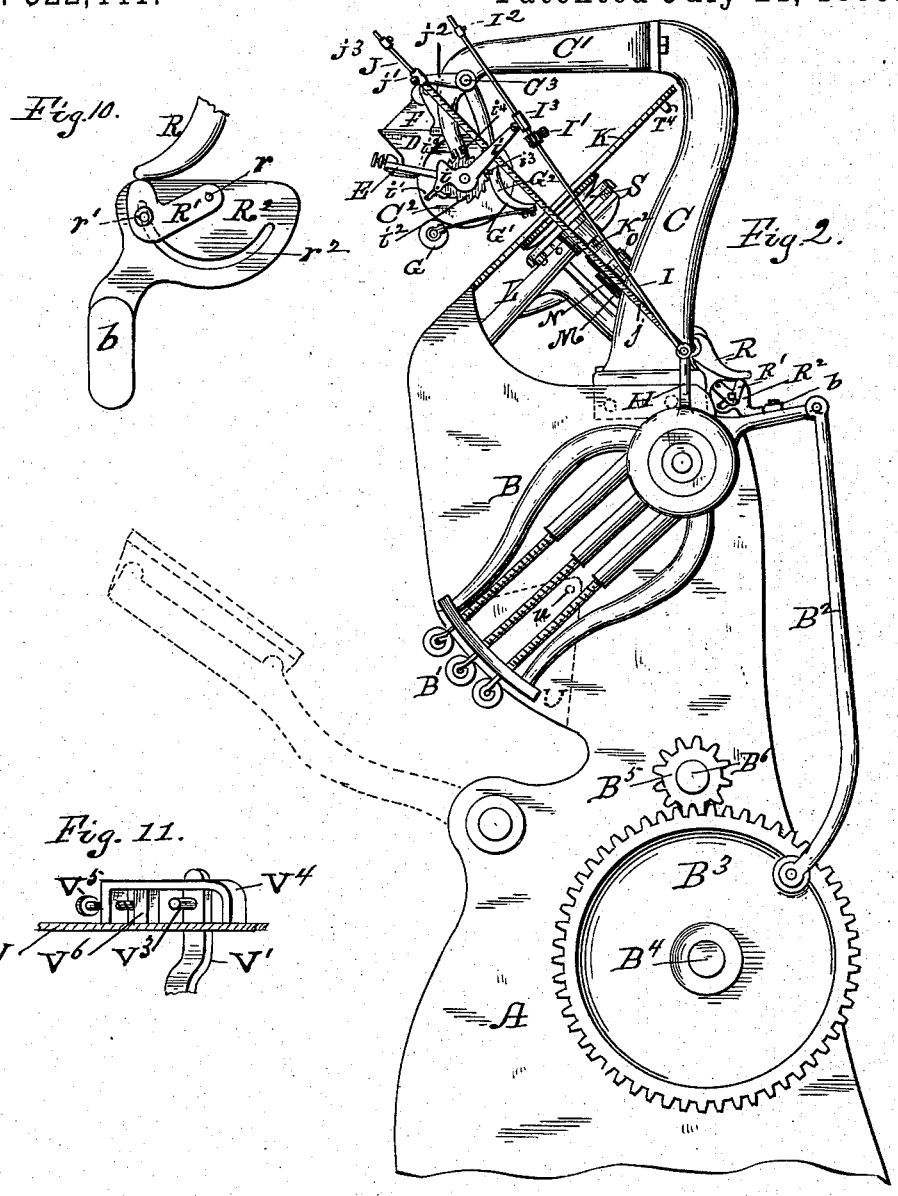

Witnesses:
L. C. Hills
Wm. Duvall

Inventor:
Wm. H. Golding
By E. B. Stocking
Atty.

N. PETERS, Photo-Lithographer, Washington, D. C.

(No Model.) 5 Sheets—Sheet 3.

W. H. GOLDING.

CHROMATIC ATTACHMENT FOR PRINTING MACHINES.

No. 322,441. Patented July 21, 1885.

Fig. 3.

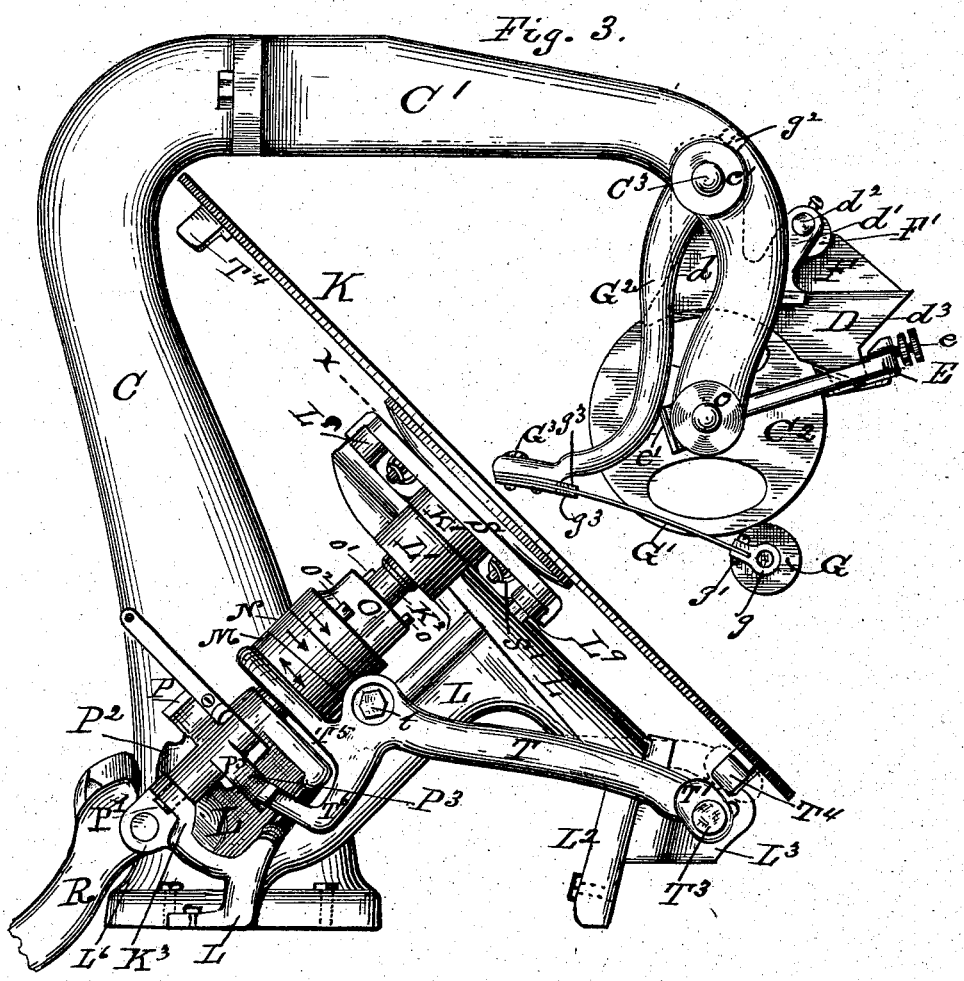

Fig. 3a

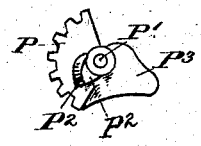

Witnesses:
L. B. Hills
Wm. Duwall

Inventor:
Wm. H. Golding
By E. B. Stoughton
Atty.

N. PETERS, Photo-Lithographer, Washington, D. C.

(No Model.) 5 Sheets—Sheet 4.

W. H. GOLDING.

CHROMATIC ATTACHMENT FOR PRINTING MACHINES.

No. 322,441. Patented July 21, 1885.

Fig. 4.

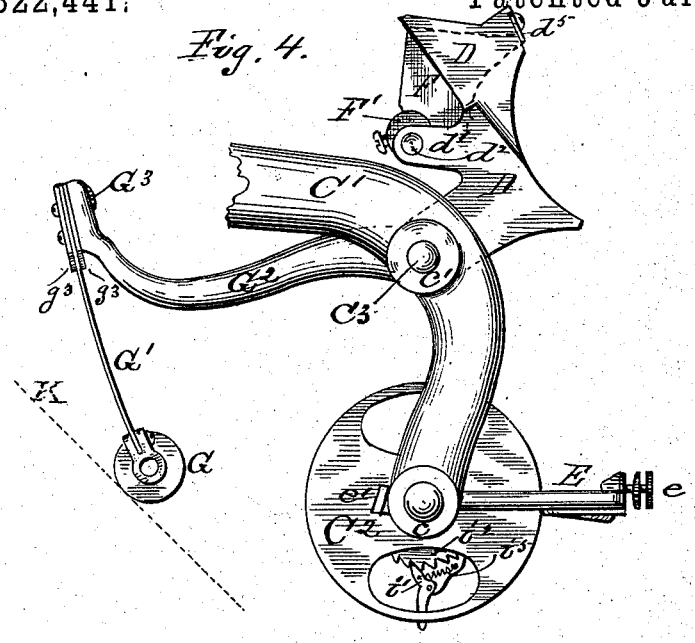

Fig. 5.

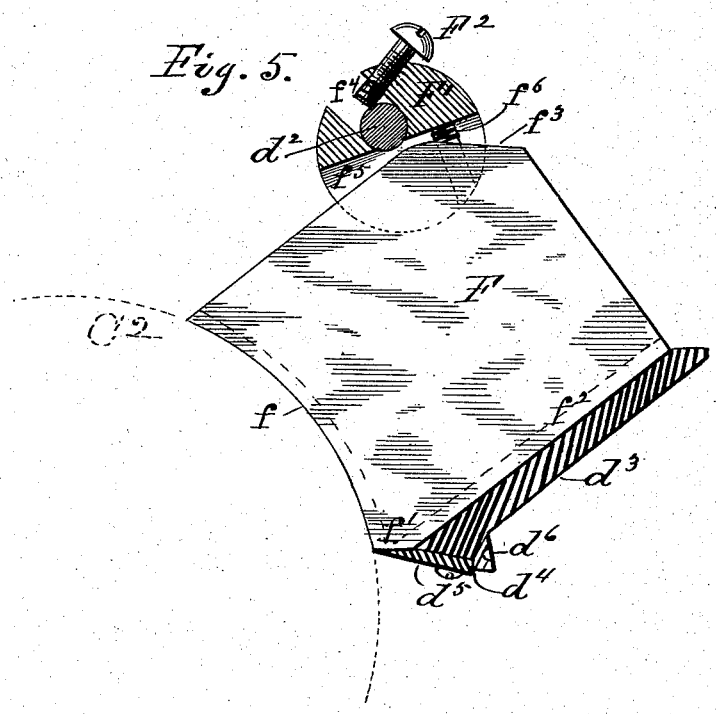

Fig. 6.

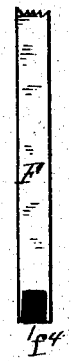

Witnesses:
L. C. Hills
Wm. Duvall

Inventor:
Wm. H. Golding
By E. B. Stocking
Atty.

N. PETERS, Photo-Lithographer, Washington, D. C.

(No Model.) 5 Sheets—Sheet 5.

W. H. GOLDING.

CHROMATIC ATTACHMENT FOR PRINTING MACHINES.

No. 322,441. Patented July 21, 1885.

Fig. 7.

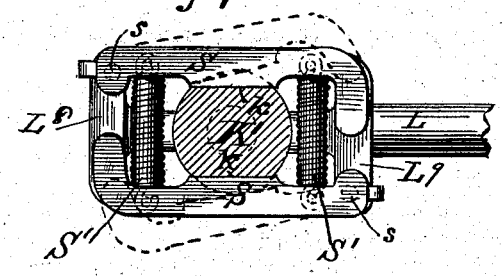

Fig. 8.

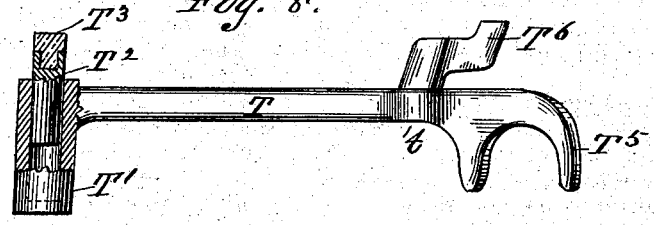

Fig. 9.

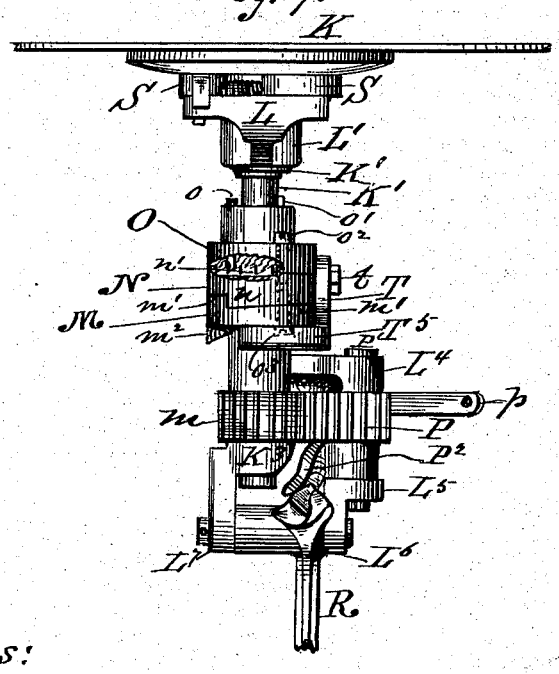

Witnesses:
L. C. Hills
Wm. Duvall

Inventor:
Wm. H. Golding
By E. B. Stocking
Atty.

N. PETERS, Photo-Lithographer, Washington, D. C.

UNITED STATES PATENT OFFICE.

WILLIAM HUGHSON GOLDING, OF BOSTON, MASSACHUSETTS.

CHROMATIC ATTACHMENT FOR PRINTING-MACHINES.

SPECIFICATION forming part of Letters Patent No. 322,441, dated July 21, 1885.

Application filed February 23, 1884. (No model.)

To all whom it may concern:

Be it known that I, WILLIAM H. GOLDING, a citizen of the United States, residing in Boston, (Chelsea,) in the county of Suffolk and State of Massachusetts, have invented certain new and useful Improvements in Chromatic Attachments for Printing-Machines, of which the following is a specification, reference being had therein to the accompanying drawings, in which—

Figure 1 is a perspective of a portion of a press provided with my improved chromatic attachment. Fig. 2 is a side elevation. Fig. 3 is an enlarged elevation of the opposite side of the ink-fountain and disk-operating devices. Fig. 3^a is an end elevation of the segmental gear and its cams. Fig. 4 is a detached side elevation of the ink-fountain opened for cleaning or other purposes. Fig. 5 is a side elevation of one of the ink-fountain partitions, with the cross-bar and attaching collar in section. Fig. 6 is an edge view of a portion of a partition. Fig. 7 is a plan and partial section on the line *x*, Fig. 3, showing the disk-clamps and adjacent parts. Fig. 8 is a plan, partly in section, of the disk-cushioning lever. Fig. 9 is a plan of the disk-operating mechanism and an edge view of the disk. Figs. 10 and 11 are enlarged details hereinafter referred to.

Like letters refer to like parts in all the figures.

Among the objects and advantages secured by my invention is a chromatic attachment which is readily applicable to existing popular forms of job presses. My attachment comprises an ink-fountain capable of supplying at will one or more colors in desired uniform quantities, and readily accessible for cleaning purposes; a brayer adapted to transfer mechanically, and in imitation of hand-work, the ink from the fountain to the disk in one or more stripes and colors as supplied; a disk having a positive semi-rotation, whereby the stripes of color are preserved in parallel lines thereon; a blending-surface below the form, adapted to be shifted while the inking-rollers are upon it, and provided with means for regulating the blending effect of its movements, and means whereby the entire attachment is quickly rendered capable of use in single-color work.

Other objects, purposes, and advantages will appear in the following description of the construction and operation of my invention, and the novel features thereof will be specifically set forth in the claims

A represents the frame-work of any ordinary press; B, the roller-frame carrying the inking-rollers B′, and oscillated by means of a connecting-rod, B^2, secured to the gear B^3, mounted on the main shaft B^4, said gear being operated by a pinion, B^5, mounted on the crank-shaft B^6, which is operated by a treadle or otherwise as is usual.

C represents a standard secured to any convenient upper portion of the press; and formed integrally therewith, it may be, or secured thereto, as shown, is a bracket, C′, comprising two side arms which project over and depend above the ink-disk, and are provided with bearings *c c′*, (see Fig. 3,) the former for the shaft of the ink-fountain cylinder C^2, and the latter for a rock-shaft, C^3.

D represents the ink-well, which consists of a bottomless frame or box the end walls of which snugly embrace the ends of the cylinder C^2, and are provided with two perforated standards or risers, *d d′*, the former mounted loosely upon the shaft C^3, and the latter serving as a support for the cross bar or rod d^2. The bottom edge of the lower side, d^3, of the ink-well is thickened, and is recessed at d^4 (see Fig. 5) to form a seat for the doctor d^5, and the outer surface of said thickened lower edge is disposed at an angle to form a suitable bearing-surface for the screws *e* of the swinging clamp E, for which screws seats or depressions d^6 may be made. The clamp E consists of an open frame mounted loosely upon the shaft of the cylinder C^2, and provided at its pivoted ends with laterally and outwardly projecting stops *e′*, which limit the downward movement of the clamp by coming in contact with the depending arms of the bracket C′. (See Fig. 4.) By dropping the clamp, as shown in this figure, the ink-well, with the partitions therein, may be raised from the cylinder, thus exposing all of the parts for cleaning purposes. Each of the partitions F is a plate of metal cut out upon one edge, *f*, to fit the periphery of the cylinder C^2, and having a lower corner, *f′*, cut off, so as to bear upon the upper surface

of the doctor, while its rear edge, f^2, bears against the inner surface of the wall d^3 of the ink-well. The upper corner of the plate is also cut off to form a bearing-surface, f^3, for a spring-pressure holding device of any suitable construction, whereby the partition or plate may be yieldingly forced down against the cylinder, ink-well, and doctor. The lower edges of each partition are grooved, and any suitable flexible or other packing, f^4, is inserted in the grooves to render the partitions ink-tight and to prevent undue wear upon the cylinder. The spring-pressure holding device employed in this instance consists of a collar, F′, apertured at f^4 to embrace the rod d^2, and slotted at f^5 for the reception of the partition, and provided with a coiled spring, f^6, arranged therein so as to bear upon the upper portion or surface, f^3, of the partition. A set-screw, F^2, serves to removably secure the collar upon the rod.

By loosening the screw the collar and partition may be moved along the rod, and in this manner the compartments of the well designed for different colors may be regulated in accordance with the desired width of stripe to be printed. When the screw is loosened, the collar may be turned, so that the bottom wall of the partition-slot is parallel with the edge of the partition, when the latter may be withdrawn from the well. Thus the number of compartments may be regulated as desired.

When a partition is inserted, the collar is turned so as to compress the spring upon the surface f^3, when the set-screw is tightened upon the rod, and the collar and partition are firmly held against longitudinal movement upon the rod, and the partition itself is yieldingly held down into the well and against the cylinder.

The brayer comprises the transfer-roll G, mounted in slotted bearings or boxes g, secured to springs G′, which are inserted in said slots and secured therein by screws g'. The rear ends of the springs are secured to the free ends of arms G^2, connected by a cross-bar, G^3, and rigidly mounted on the shaft C^3 by set-screws g^2, (see dotted lines, Fig. 3,) so that when the said shaft is oscillated or rocked the roll G is carried from the ink-fountain cylinder to and upon the disk and back to the cylinder. In this instance, to secure elastic pressure of the roll G upon the disk and cylinder the springs G′ are so projected from the arms G^2 that the distance from the center of shaft C^3 to a point upon the lower periphery of the roll G is greater than from said center to the ends of the arms. In other words, the cylinder and ink-disk are so relatively arranged that both project into the path which the roll G would without obstruction normally pass over or through, and hence when it is in contact with the cylinder the springs are curved upwardly, and when in contact with the disk they are curved downwardly. (See Fig. 4.) g^3 are stiffening-plates of steel secured above and below the springs G′.

Referring to Fig. 2, H represents a bracket or arm projecting from the hub of the inking-roller frame B; and pivotally connected thereto are two rods, I J, the former provided with two adjustably-fixed collars, I′ I^2, and passing through a sliding collar, I^3, pivotally secured to a ratchet-lever, i, carrying a pawl, i', which takes into the teeth of the ratchet i^2, secured to the shaft of the cylinder C^2. The lever i embraces the ratchet, and is provided with two projections, i^3, which limit its movements by striking a stop, i^4, projecting from the depending arm of the bracket C′. A spring, i^5, Fig. 4, holds the pawl in contact with the ratchet and permits it to be thrown and held out of contact with the same in order to stop the operation of the cylinder at will. The rod J is encircled by a long coiled spring, j, and passes through a sliding collar, J′, pivoted to an arm, J^2, secured to the shaft C^3; and an adjustable collar, J^3, is provided outside of the sliding collar to time the movement of arm j^2.

The ink-well being supplied with one or more colors, they are transferred to the disk in the following manner: As the inking-rollers B′ are carried slightly farther down than shown, (Fig. 2,) the rod I operates the ratchet-lever so as to partially rotate the cylinder C^2, the position of the collar I′ on the rod determining in a measure the extent of said rotation, and therefore the quantity of ink withdrawn from the well. The transfer-roll G being yieldingly held in contact with the cylinder is rotated thereby, thus taking ink therefrom during the movement of the cylinder. As the inking-rollers approach the disk, the rod J draws upon the arm j^2 and gives movement to the brayer or transfer-roll, whereby it is rotated for a short distance upon the cylinder C^2, is directly transferred to the disk in advance of the inking-rollers B, carried along and rotated upon the disk with a yielding pressure, and then elevated above the same, when the inking-rollers complete their movement upward and return, followed by the brayer, which again travels upon the disk, and is finally carried again against the cylinder, as shown, when a new movement of the latter supplies a fresh quantity of ink to be again transferred, as described. This operation is applicable to the distribution upon the disk of a single color as well as of several colors, and when the latter are in the well they are taken out, transferred, and applied to the disk by the brayer in distinct stripes extending the length of the path of the brayer upon the disk, and are continued completely over one-half of the disk by the inking-rolls B′.

It will be noticed that the cylinder and brayer cover one-half the disk, and this relative size and arrangement of the parts, when taken in connection with any suitable means for giving the disk decided intermittent semi-rotations, secures a very advantageous uniformity in the distribution of the ink or inks to the disk, and consequently to the form.

In ink-fountains, inking rollers and disks heretofore constructed, the supply has in many

places been almost wholly at the edge of the disk, and then when partly distributed by the inking-rollers is by them transferred to the form in such partly-distributed condition, resulting in more ink at the edges of the form than at the center.

Referring to Figs. 3, 7, 8, and 9, which illustrate the disk supporting, rotating, and cushioning devices, K represents the disk, which has a central hub, K′, the periphery of which is cut away on opposite sides to produce flat parallel surfaces *k*, (see Fig. 7,) and below these surfaces is turned to fit a bearing, L′, in the disk-supporting bracket L, and is bored to fit and secured firmly to the shaft K^2, the lower end of which turns in a bearing, K^3, in the bracket L. The bracket L is secured to any suitable part of the frame-work of the press which will present the disk in proper relative position to the fountain and brayer. The arms L^2 L^3 formed on the brackets are respectively adapted to be secured to a suitable rear part of the bed of the press and to one of the usual strengthening-ribs cast thereon.

M, N, and O represent three collars fitted to the shaft K^2, and constituting a combined clutch and ratchet. The collar M is loosely mounted on the shaft, and is provided at its lower end with a pinion, *m*, and at its upper end with two inclined steps, *m′*, forming one of the coacting elements of a clutch, each step extending one-half around the collar. The collar N is also provided with similar steps, *n*, inverted, so as to coact with the collar M as a clutch. The end of the collar N opposite its steps is provided with a circular rack-bar or ratchet, *n′*, into which a loosely-seated pin-pawl, *o*, takes by gravity, said pawl being located in the collar O. A spline, *o′*, on the shaft K^2, fits a seat formed in the collar O, whereby it is caused to rotate with the shaft, but is capable of longitudinal movement thereon.

The bracket L is provided with the bearings L^4 and L^5 for a journal or shaft, P′, on which is loosely mounted a segmental gear, P, which meshes with the pinion *m*, and is provided with an arm or lever, *p*, for the attachment of any suitable weight or spring for moving the segmental gear in one direction; or said movement may be accomplished by connecting said lever with any intermittently-moving and properly-timed part of the press. There is also formed upon the bracket L the bearings L^6 L^7 for a shaft, pin, or bolt, Q, upon which is loosely mounted a disk-operating cam-lever, R, which coacts with a cam, P^2, formed on the hub of the segmental gear P, so as to move said gear in one direction. The lever R is designed to be raised by the contact therewith of some suitable moving part of the press and to fall by gravity. Such moving part may be a cam on the shaft of the inking-roller carrier or frame, or a cross-bar, as *b*, upon the same.

In Figs. 2 and 10 I illustrate an adjustable cam, R′, mounted on a bracket, R^2, formed on the cross-bar *b*. The cam is pivoted at *r* to the bracket, and is adjusted to come in contact with the lever R sooner or later in the movement of the bar, and to remain in desired adjustment by means of a binding-screw, *r′*, seated in the cam and passing through a curved slot, r^2, in the bracket.

As the cross-bar or the shaft of the roller-frame partakes of its movement, the lever R is raised once during each movement of the inking-rolls over and downward below the form.

Now, referring to Figs. 3 and 9, it will be seen that the lever R will rotate the segmental gear toward the shaft K^2, and the gear meshing with the pinion *m* will turn the collars M and N, by reason of their clutch-like connection with each other, in the direction shown by arrows thereon.

For the purpose of definite semi-rotation of the disk, the collars N and O are secured to each other by a bolt or bolts, o^2, screw-threaded through the latter and partly through the former, so that the movement of the collar M, as described, will be communicated to the shaft K^2 by means of the spline *o′*, and the disk K, being rigidly mounted on the shaft, is also moved. The segmental gear is proportioned to give the pinion a half-revolution only, and hence that is the extent of the rotation of the disk. In this movement of the segmental gear the lever *p* is drawn or vibrated against the action of its weight or spring, and when the lever R has completed its operation upon the cam P^2, it (the lever R) falls by gravity during the return of the moving part of the press by which it is raised, and the lever *p* is drawn by its spring or weight and operates the segmental gear through a return semi-rotation, giving a like movement to the collar M, which rides the inclined inversed steps of the collar N, which slides, together with the collar O, upward upon the shaft until the highest point in the step *m′* is passed by one of the steps *n* of collar N, when the collars N and O recede or fall along the shaft, and the mechanism is set for giving another half-turn to the disk. This movement of the disk being intermittent, suitable cushioning mechanism is desirable to gradually overcome the momentum of the disk. In this instance I provide clamps S, (see Fig. 7,) constructed and arranged to bear yieldingly against the flattened portions of the hub K′. Each of the clamps is capable of performing the required function without the assistance of the other, and I therefore do not limit myself to an employment of any specified number, but may increase them to increase the aggregate cushioning effect, as desired.

When increased to more than one, I prefer to arrange the clamps S, as shown—that is to say, one of the clamps having its pivot *s* at the opposite side of the hub K′ to that at which the pivot *s* of the opposite clamp is located, so that when opened or spread apart by the periphery of the hub, where it is not flattened, the free ends of the clamps are not separated to such a distance as would be the case were they each pivoted at one side of the hub, there-

by contributing to compactness of construction in that the bars or lugs L^9 need not project from the bracket L to so great a distance. As above stated, I consider this arrangement more than a mere duplication of a clamp to bear upon one side of the hub. The opposite arrangement and pivoting of duplicate clamps also permits of a snug and compact arrangement of the springs S′, and the connection of the springs being to the clamps themselves the outward strain upon the spring at the free end of one of the clamps is communicated to and in the nature of an inward strain near the pivoted end of the opposite clamp. All of these advantages of compactness in arrangement and effectiveness in operation result from the opposite pivoting of the clamps and the connection of the springs, substantially as specified.

The bracket L is provided with two transverse bars or lugs, L^8 L^9, to one of which at *s* one end of the clamp S is pivoted, while upon the other bar the opposite or free end of the clamp slides. Near the free end of the clamp a coiled spring, S′, is attached and extends across the bracket L, and secured, it may be, to any suitable projection on the bar L^9; but in this instance, as two clamps are employed to increase the cushioning effect, I attach one end of each of the coiled springs to the pivoted end of one clamp, and the other end to or near the free end of the opposite clamp, whereby short springs of high tension can be used and a compact arrangement of the parts is secured.

In the normal position of the disk—that which it assumes when at rest—the inner edges of the clamps rest and are yieldingly held against the plane surfaces *k* of the hub K′, and as the disk is rotated the cylindrical portions of the hub swing each clamp outward, as shown in dotted lines, against the stress of the springs until it again reaches its normal position, when the clamps are by the springs drawn inwardly and bring the disk to rest. As this change or semi-rotation of the disk takes place when neither the brayer nor the inking-rolls are on it, the slight vibration of the disk when the clamps are employed as the sole cushioning mechanism is harmless; but for accurate and rapid intermittent operation I have illustrated additional cushioning devices.

As thus far described, it is clear that the vibration of the disk at the end of each semi-rotation can be reduced to a minimum by increasing the number of clamps arranged parallel with or at right angles to those shown, in which latter arrangement the hub K′ would be substantially square at the portion where the clamps would embrace it.

Referring to Figs. 3 and 8, T represents a lever adapted to automatically interpose a combined air and spring or other cushioning device, whereby rapid successive intermittent semi-rotations of the disk are secured without undue vibrations thereof. The lever T is pivoted at *t* to the bracket L, and carries at its outer or free end a cylinder, T′, having an air-tight plug or piston, T^2, the end of which is provided with a rubber spring, T^3, these three elements constituting a combined spring and air cushion.

Upon the disk K are two oppositely-located depending stops, T^4, which alternately strike against the spring T^3 after a semi-rotation of the disk, and after the free end of the lever T is raised, as shown by dotted lines.

The arm of the lever T, which projects in rear of its pivot, may be so constructed and connected with any other moving parts of the attachment or of the press as to be depressed at proper intervals to elevate the free end into the path of the stops. For example, a rear arm, T^5, may be extended to pass over the shaft K^2 and the hub of the collar M, as shown, and a cam, m^2, (dotted lines, Fig. 9,) on the lower end of the clutch portion of the collar, may be employed to depress the rear extension or arm, T^5. The outline of the cam m^2 would be substantially parallel with that of the inclined step m', and as the collar M is operated successively in opposite directions, as shown by the arrows thereon, Fig. 3, the cam would be carried therewith, and would alternately depress and allow the elevation of the arm T^5, which elevation would be caused by the greater weight of the free end of the lever T.

In the construction shown in Fig. 3 the lever T is provided with a second or an additional arm, T^6, in rear of its pivot, which arm is operated by a cam, P^3, at one end of the segmental gear P, so that as the latter partially rotates the pinion *m* and the clutch mechanism to give the disk a semi-rotation, it also, by means of the cam P^3, simultaneously depresses the rear end of the lever T, and projects the air and spring cushion or other cushion carried by lever T into the path of the stops T^4.

When printing in a single color, intermittent motions or partial rotations less than a semi-rotation are desirable to insure even distribution of the ink; and to adapt the disk-rotating mechanism for such a use of the attachment I remove the lever T, and reverse the bolt or bolts o^2, as shown by dotted lines o^3, Fig. 9, so that the clutch-collars M and N move together as one piece, while they act as a ratchet in which the pin-pawl *o* operates. I then either substitute for the lever R another having a cam end, which shall operate the cam P^2 and segmental gear P through a desired shorter distance, or I adjust the cam R′ so as to move the lever R a less distance, and in both cases the pawl takes into a tooth of the ratchet during the disk-rotating movements of the pinion, gear, and cam-lever, and rides the teeth inoperatively during the return movements of those devices, so that by a proper operation of the lever R the disk may be moved through a greater or less portion, as desired, of a semi-rotation, the shortest movement being that produced by the change of the pawl

o over a single tooth of the ratchet after each operation of the lever.

Referring to Figs. 1, 2, and 11, U represents an ink-distributer located below the form, and mounted upon a shaft or rod, *u*, and adapted to be reciprocated along the same when the inking-rolls B are upon it.

In the patent granted me April 25, 1882, numbered 256,891, a similar distributing-plate is shown; but the devices for reciprocating the same were not properly timed to accomplish the purpose now in view, neither could the extent of reciprocation be adjusted, as hereinafter described.

Upon the shaft B^4 is a cam, V, adapted to vibrate one arm of the lever V′, pivoted to a bracket, V^2, on the frame of the machine, the other arm of the lever being extended above and in rear of the lower edge of the distributer, and having a projecting pin or bolt, V^3, (see Fig. 11,) entering a slot or slotted bracket, V^4, formed in or on the plate. At one end of the slot or bracket is an adjusting-screw, V^5, which abuts against a swinging or sliding button, V^6, against which the pin or bolt of the lever V′ strikes when vibrating in one direction, said pin or bolt striking the opposite end of the slot or slotted bracket when vibrating in the opposite direction. By shortening or lengthening the slot by moving the button a longer or shorter reciprocation of the distributer is secured, and a desired greater or less blending of the colors upon the inking-rolls, and therefore upon the form, is attained than if the reciprocations of the distributer were uniform and unchangeable. Again, by timing the cam V relatively with the advancement of the rolls B′ upon the distributer, as shown in Fig. 1, a greater lateral movement is given to the first of those rolls than to the succeeding ones, so that the margins of the colors are more thoroughly blended. Furthermore, in single-color printing this relative timing of the distributer and the rolls gives a fresh supply of ink at points on the rolls touched in their downward passage over the form, which is highly advantageous when printing forms with heavy lines running down.

In an upward movement of the inking-rolls over a form it is highly probable that the points of contact of type with the rolls would be substantially the same as the points of contact of the same type during the previous downward movement of the inking-rolls, so that without a lateral shifting of one or more of the inking-rolls, or of a distributer below the form, fresh ink would not be so positively supplied, and this is clearly noticeable in forms having heavy-faced type at its lower portion. So, also, in color-printing in stripes, the greater or less blending of colors, the greater or less overlapping of the stripes of color at their edges may be accomplished by a greater or less lateral reciprocation of the distributer. Now, by so timing said reciprocation as to have it occur only as the first inking-roller is advancing upon the distributer, said roller would also be carried upon and reciprocated with the distributer, while the second inking-roller would not positively be reciprocated, and hence the circles of color on the first roller would be overlapped upon the circles of color upon the second roller, and thus greater width of blended colors would be accomplished in the following impression.

The devices and combinations of devices herein shown are capable of use in inking attachments differing essentially from that herein shown, and I therefore do not limit myself to their use in the particular apparatus herein shown, but deem such separate complete devices and combinations as comprehended by my invention, when used singly or jointly in other inking apparatuses; nor do I confine myself to the exact mechanism herein shown for giving the disk a semi-rotation, or for giving the clutch and ratchet partial rotations, but adhere to my right to substitute any well-known clutch-operating mechanism; and I may substitute well-known mechanical elements for those shown for giving motion and position to the novel devices and combinations of devices herein shown, and even these may be altered in any manner and to any degree within the skill of persons conversant in the construction of printing-presses.

Having described my invention and its operation, what I claim is—

1. An ink-fountain comprising a supply-cylinder, a suspended well, and a swinging clamp, substantially as specified.

2. An ink-fountain comprising a supply-cylinder, a suspended bottomless well, a swinging clamp, and yieldingly-depressed removable partitions, substantially as specified.

3. A bottomless ink-well having a doctor secured to its lower edge, end walls perforated for suspension, a yielding partition-holding device, and removable partitions bearing partly upon the doctor and partly on a wall of the well, substantially as specified.

4. An ink-well having end walls interiorly finished to snugly embrace a supply-cylinder, and perforated for suspension or pivotal support, and having at a lower edge a doctor, and an exterior bearing-surface for a clamping device, in combination with a swinging clamp-bail, substantially as specified.

5. An ink-well having removable partitions, a cross bar or rod arranged above said partitions, and intermediate yielding partition-holding devices adjustably mounted on said bar or rod, substantially as specified.

6. A partition-holding device slotted to embrace a partition apertured to embrace a fixed portion of a well, and provided with a securing device for its removable attachment to said fixed portion, substantially as specified.

7. The combination, with a fixed portion of a press, of a standard or bracket projecting over the ink-disk and having depending arms provided with bearings for the support of an ink-fountain and a mechanical brayer, and de-

vices for oscillating the brayer against and beneath the cylinder of the fountain and upon the disk, substantially as specified.

8. The combination, with a fixed portion of a press, of a standard or bracket projecting over and above the ink-disk thereof, a rock-shaft mounted in said bracket, a mechanical brayer secured to said rock-shaft, an ink-well suspended therefrom, a supply-cylinder mounted below said rock-shaft, and a swinging clamp, substantially as specified.

9. A brayer or transfer-roll mounted upon non-pivoted spring-arms, substantially as specified.

10. A brayer or transfer-roll mounted upon non-pivoted spring-arms secured to arms of a rock-shaft, substantially as specified.

11. A transfer-roll mounted on spring-arms and for oscillatory motion, in combination with a supply-cylinder and an ink-disk, both of which project into the path of the roll, the former being located above and the latter below the normal path of the roll, substantially as specified.

12. The combination of a supply-cylinder and a transfer-roll mounted on spring-arms non-pivotally secured to rigid arms of a rock-shaft, and for oscillatory motion in a path which includes or passes beneath the cylinder, substantially as specified.

13. The combination of a transfer-roll mounted on non-pivoted spring-arms and for oscillatory motion, with an ink-disk located and arranged partially within the path of the transfer-roll, substantially as specified.

14. An ink-disk the hub or spindle of which is provided with a flat bearing-surface, in combination with a clamp-spring pressed against said surface, substantially as specified.

15. An ink-disk having a hub or spindle provided with opposite bearing-surfaces, in combination with oppositely-pivoted clamps connected by springs, substantially as specified.

16. The combination of an ink-disk provided with opposite bearing-surfaces, spring-pressed clamps, and disk-semi-rotating mechanism, substantially as specified.

17. The combination of an ink-disk mounted on a shaft, a clutch having semi-circumferential steps, and clutch-semi-rotating mechanism, substantially as specified.

18. The combination of a shaft supporting an ink-disk, and provided with a clutch having two diametrically-opposite steps and a pinion, with a segmental gear having a cam and a cam-lever for operating the gear, substantially as specified.

19. The combination, with a disk-bearing shaft, of clutch mechanism comprising two members having diametrically-opposite steps, one of which members also having a ratchet, the teeth of which are arranged at a less distance apart than said steps, and a third member provided with a pawl and a removable device for connecting either two of the three members with each other, substantially as specified.

20. The combination of an ink-disk having two diametrically-opposite stops, a lever provided at its free end with a cushion, means, substantially as specified, for giving semi-rotation to the disk-bearing shaft and for intermittently projecting the free end of the lever into the path of the stops, substantially as specified.

21. The combination, with an ink-disk having stops, of a combined air and spring cushion, substantially as specified.

22. The combination, with an ink-disk having stops, and its supporting-shaft, provided with a clutch having a pinion, of a lever carrying a cushion, and a segmental gear having a cam, and means for operating the same, substantially as specified.

23. In an inking attachment, in combination with an ink-disk, a combined clutch and ratchet comprising a shaft, clutch-collars, one of which is provided with a ratchet, a spline-seated collar carrying a pawl, and a bolt or bolts for securing two of the collars to each other, substantially as specified.

24. The combination, with a semi-rotating ink-disk, of an ink-supplying apparatus extending over one-half of the disk, substantially as specified.

25. The combination of the arms C′, shaft C^3, well D, having perforated risers *d*, cylinder C^2, and clamp E, mounted on the shaft of the cylinder, and provided with the binding-screws *e*, substantially as shown and described.

26. The combination of the arms C′, rock-shaft C^3, rock-arms G^2, springs G′, rigidly connected to said rock-arms, and roll G, with rod J, bracket H, and roller-frame B, substantially as shown and described.

27. The combination of disk K, roll G, spring-arms G′, auxiliary or re-enforcing spring-plates g^3, and arms G^2, with rock-shaft C^3 and devices for operating said shaft, substantially as shown and described.

28. The combination of the roller-frame B, bracket H, rods I J, pawl-lever and pawl *i i′*, ratchet i^2, and cylinder C^2, with the roll G, arms G^2 j^2, shaft C^3, and arms C′, secured to standard C, substantially as shown and described.

29. The combination of the disk K, having hub K′, provided with flat surfaces *k*, clamps S, springs S′, and bracket L, having bars or lugs L^8 L^9, substantially as shown and described.

30. The combination of the shaft K^2, the clutch-collars M N, spline-seated collar O, pawl-pin *o*, ratchet *n′*, segmental gear P, cam P^2, and cam-lever R, substantially as shown and described.

31. The combination of cam P^3 and lever T, having arm T^6, with the disk K, having stops T^4, substantially as shown and described.

32. The combination, with a disk having

stops, of lever T, cylinder T′, piston T^2, and rubber spring T^3, substantially as shown and described.

33. The combination of lever R, segmental gear P, having cams P^2 P^3, shaft P′, and disk K, having stops T^4, clutch M N, and lever T, substantially as shown and described.

34. The combination of frame B, rollers B′, and plate U with lever V′, adjustable button V^6, cam V, shaft B^4, gear B^3, and rod B^2, constructed and timed substantially as specified.

35. The combination of plate U, provided with an adjustable button, V^6, with the lever V′ and cam V, substantially as shown and described.

36. The combination of the lever R with the cross-bar *b*, slotted plate R^2, set-nut *r*′, and adjustable cam R′, substantially as shown and described.

In testimony whereof I affix my signature in presence of two witnesses.

WILLIAM HUGHSON GOLDING.

Witnesses:
ROBT. HUMPHREYS,
W. G. EVERT.